FOREWORD

This wiring diagram manual has been prepared to provide information on the electrical system of the 2000 CELICA.

Applicable models: ZZT 230, 231 Series

For service specifications and repair procedures of the above models other than those listed in this manual, refer to the following manuals;

Manual Name	Pub. No.
● 2000 CELICA Repair Manual	
Volume 1	RM744U1
Volume 2	RM744U2
● 2000 CELICA New Car Features	NCF169U

All information in this manual is based on the latest product information at the time of publication. However, specifications and procedures are subject to change without notice.

TOYOTA MOTOR CORPORATION

NOTICE

When handling supplemental restraint system components (removal, installation or inspection, etc.), always follow the direction given in the repair manuals listed above to prevent accidents and supplemental restraint system malfunction.

A INTRODUCTION

This manual consists of the following 13 sections:

No.	Section	Description
A	INDEX	Index of the contents of this manual.
	INTRODUCTION	Brief explanation of each section.
B	HOW TO USE THIS MANUAL	Instructions on how to use this manual.
C	TROUBLE–SHOOTING	Describes the basic inspection procedures for electrical circuits.
D	ABBREVIATIONS	Defines the abbreviations used in this manual.
E	GLOSSARY OF TERMS AND SYMBOLS	Defines the symbols and functions of major parts.
F	RELAY LOCATIONS	Shows position of the Electronic Control Unit, Relays, Relay Block, etc. This section is closely related to the system circuit.
G	ELECTRICAL WIRING ROUTING	Describes position of Parts Connectors, Splice points, Ground points, etc. This section is closely related to the system circuit.
H	INDEX	Index of the system circuits.
	SYSTEM CIRCUITS	Electrical circuits of each system are shown from the power supply through ground points. Wiring connections and their positions are shown and classified by code according to the connection method. (Refer to the section, ”How to use this manual”). The ”System Outline” and ”Service Hints” useful for troubleshooting are also contained in this section.
I	GROUND POINT	Shows ground positions of all parts described in this manual.
J	POWER SOURCE (Current Flow Chart)	Describes power distribution from the power supply to various electrical loads.
K	CONNECTOR LIST	Describes the form of the connectors for the parts appeared in this book. This section is closely related to the system circuit.
L	PART NUMBER OF CONNECTORS	Indicates the part number of the connectors used in this manual.
M	OVERALL ELECTRICAL WIRING DIAGRAM	Provides circuit diagrams showing the circuit connections.

This manual provides information on the electrical circuits installed on vehicles by dividing them into a circuit for each system.

The actual wiring of each system circuit is shown from the point where the power source is received from the battery as far as each ground point. (All circuit diagrams are shown with the switches in the OFF position.)

When troubleshooting any problem, first understand the operation of the circuit where the problem was detected (see System Circuit section), the power source supplying power to that circuit (see Power Source section), and the ground points (see Ground Point section). See the System Outline to understand the circuit operation.

When the circuit operation is understood, begin troubleshooting of the problem circuit to isolate the cause. Use Relay Location and Electrical Wiring Routing sections to find each part, junction block and wiring harness connectors, wiring harness and wiring harness connectors, splice points, and ground points of each system circuit. Internal wiring for each junction block is also provided for better understanding of connection within a junction block.
Wiring related to each system is indicated in each system circuit by arrows (from__, to__). When overall connections are required, see the Overall Electrical Wiring Diagram at the end of this manual.

[A]

STOP LIGHT

∗ The system shown here is an EXAMPLE ONLY. It is different to the actual circuit shown in the SYSTEM CIRCUITS SECTION.

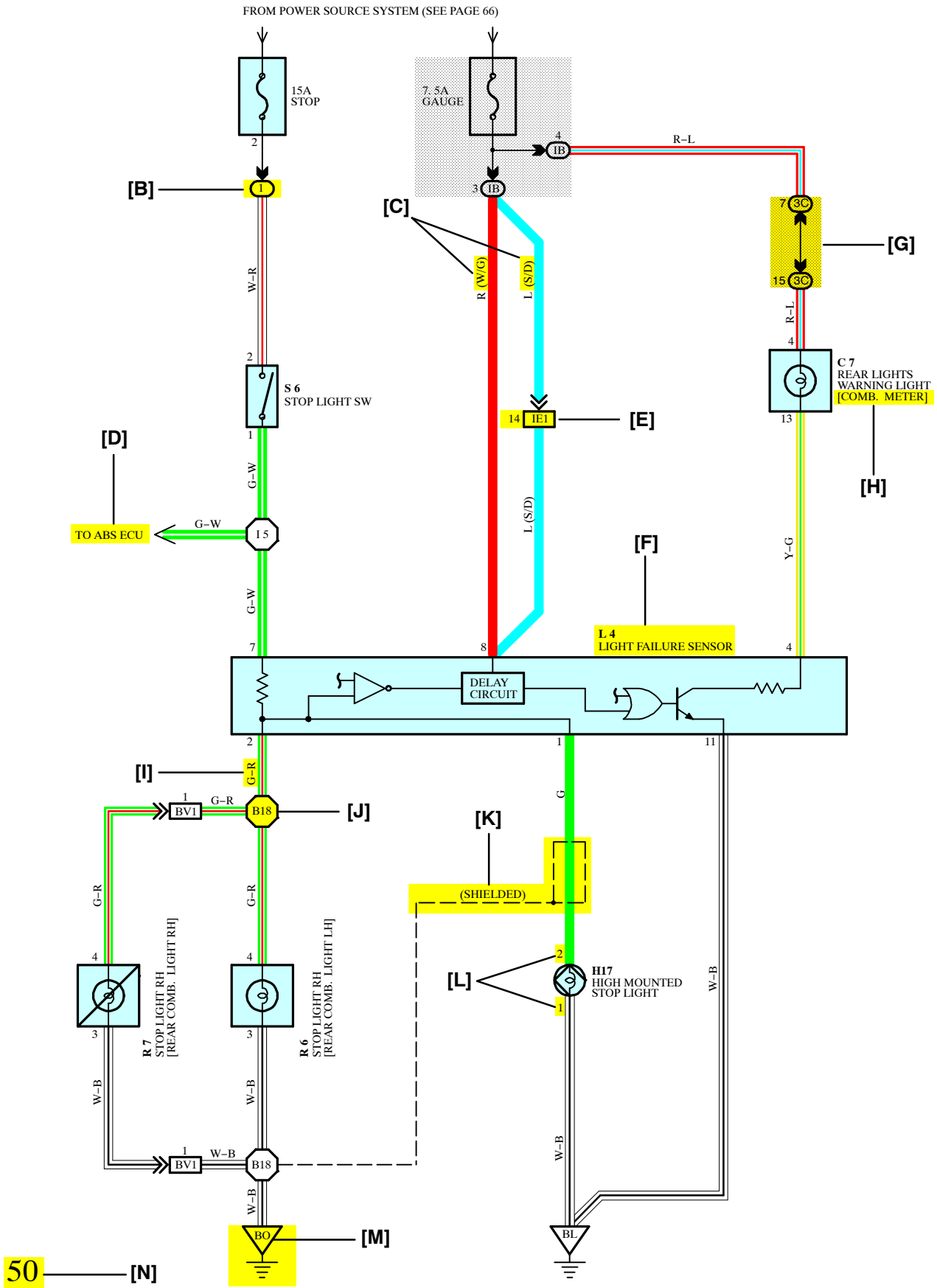

[A] : System Title

[B] : Indicates a Relay Block. No shading is used and only the Relay Block No. is shown to distinguish it from the J/B

Example: (1) Indicates Relay Block No.1

[C] : ( ) is used to indicate different wiring and connector, etc. when the vehicle model, engine type, or specification is different.

[D] : Indicates related system.

[E] : Indicates the wiring harness and wiring harness connector. The wiring harness with male terminal is shown with arrows (⩔).
Outside numerals are pin numbers.

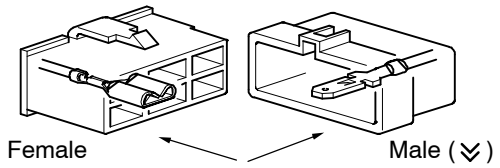

The first letter of the code for each wiring harness and wiring harness connector(s) indicates the component's location, e.g, "E" for the Engine Compartment, "I" for the Instrument Panel and Surrounding area, and "B" for the Body and Surrounding area.

When more than one code has the first and second letters in common, followed by numbers (e.g, IH1, IH2), this indicates the same type of wiring harness and wiring harness connector.

[F] : Represents a part (all parts are shown in sky blue). The code is the same as the code used in parts position.

[G] : Junction Block (The number in the circle is the J/B No. and the connector code is shown beside it). Junction Blocks are shaded to clearly separate them from other parts.

Example:

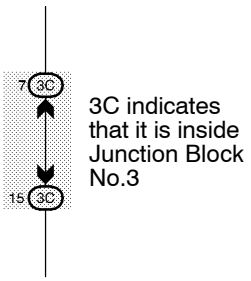

[H] : When 2 parts both use one connector in common, the parts connector name used in the wire routing section is shown in square brackets [ ].

[I] : Indicates the wiring color.

Wire colors are indicated by an alphabetical code.

B	=	Black	W	=	White	BR	=	Brown
L	=	Blue	V	=	Violet	SB	=	Sky Blue
R	=	Red	G	=	Green	LG	=	Light Green
P	=	Pink	Y	=	Yellow	GR	=	Gray
O	=	Orange						

The first letter indicates the basic wire color and the second letter indicates the color of the stripe.

Example: L – Y

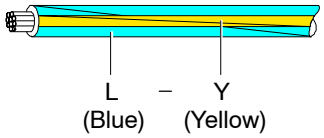

[J] : Indicates a wiring Splice Point (Codes are "E" for the Engine Room, "I" for the Instrument Panel, and "B" for the Body).

Example:

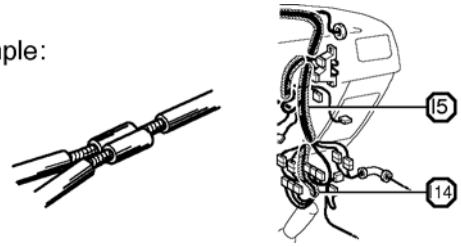

The Location of splice Point I 5 is indicated by the shaded section.

[K] : Indicates a shielded cable.

[L] : Indicates the pin number of the connector.
The numbering system is different for female and male connectors.

Example: Numbered in order from upper left to lower right / Numbered in order from upper right to lower left

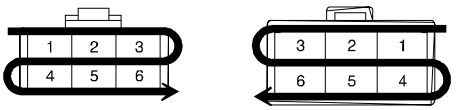

Female Male

[M] : Indicates a ground point.

The first letter of the code for each ground point(s) indicates the component's location, e.g, "E" for the Engine Compartment, "I" for the Instrument Panel and Surrounding area, and "B" for the Body and Surrounding area.

[N] : Page No.

[O] **SYSTEM OUTLINE**

Current is applied at all times through the STOP fuse to TERMINAL 2 of the stop light SW.
When the ignition SW is turned on, current flows from the GAUGE fuse to TERMINAL 8 of the light failure sensor, and also flows through the rear lights warning light to TERMINAL 4 of the light failure sensor.

STOP LIGHT DISCONNECTION WARNING

When the ignition SW is turned on and the brake pedal is pressed (Stop light SW on), if the stop light circuit is open, the current flowing from TERMINAL 7 of the light failure sensor to TERMINALS 1, 2 changes, so the light failure sensor detects the disconnection and the warning circuit of the light failure sensor is activated.
As a result, the current flows from TERMINAL 4 of the light failure sensor to TERMINAL 11 to GROUND and turns the rear lights warning light on. By pressing the brake pedal, the current flowing to TERMINAL 8 of the light failure sensor keeps the warning circuit on and holds the warning light on until the ignition SW is turned off.

[P] **SERVICE HINTS**

S6 STOP LIGHT SW

2–1 : Closed with the brake pedal depressed

L4 LIGHT FAILURE SENSOR

1, 2, 7–GROUND : Approx. **12** volts with the stop light SW on
4, 8–GROUND : Approx. **12** volts with the ignition SW at **ON** position
11–GROUND : Always continuity

[Q] **: PARTS LOCATION**

Code	See Page	Code	See Page	Code	See Page
C7	34	L4	36	R7	37
H17	36	R6	37	S6	35

[R] **: RELAY BLOCKS**

Code	See Page	Relay Blocks (Relay Block Location)
1	18	R/B No.1 (Instrument Panel Left)

[S] **: JUNCTION BLOCK AND WIRE HARNESS CONNECTOR**

Code	See Page	Junction Block and Wire Harness (Connector Location)
IB	20	Instrument Panel Wire and Instrument Panel J/B (Lower Finish Panel)
3C	22	Instrument Panel Wire and J/B No.3 (Instrument Panel Left Side)

[T] **: CONNECTOR JOINING WIRE HARNESS AND WIRE HARNESS**

Code	See Page	Joining Wire Harness and Wire Harness (Connector Location)
IE1	42	Floor Wire and Instrument Panel Wire (Left Kick Panel)
BV1	50	Luggage Room Wire and Floor Wire (Luggage Compartment Left)

[U] **: GROUND POINTS**

Code	See Page	Ground Points Location
BL	50	Under the Left Quarter Pillar
BO	50	Back Panel Center

[V] **: SPLICE POINTS**

Code	See Page	Wire Harness with Splice Points	Code	See Page	Wire Harness with Splice Points
I5	44	Cowl Wire	B18	50	Luggage Room Wire

[O] : Explains the system outline.

[P] : Indicates values or explains the function for reference during troubleshooting.

[Q] : Indicates the reference page showing the position on the vehicle of the parts in the system circuit.

Example : Part ”L4” (Light Failure Sensor) is on page 36 of the manual.
∗ The letter in the code is from the first letter of the part, and the number indicates its order in parts starting with that letter.

Example : L 4
- 4 — Parts is 4th in order
- L — Light Failure Sensor

[R] : Indicates the reference page showing the position on the vehicle of Relay Block Connectors in the system circuit.

Example : Connector ”1” is described on page 18 of this manual and is installed on the left side of the instrument panel.

[S] : Indicates the reference page showing the position on the vehicle of J/B and Wire Harness in the system circuit.

Example : Connector ”3C” connects the Instrument Panel Wire and J/B No.3. It is described on page 22 of this manual, and is installed on the instrument panel left side.

[T] : Indicates the reference page describing the wiring harness and wiring harness connector (the female wiring harness is shown first, followed by the male wiring harness).

Example : Connector ”IE1” connects the floor wire (female) and Instrument panel wire (male). It is described on page 42 of this manual, and is installed on the left side kick panel.

[U] : Indicates the reference page showing the position of the ground points on the vehicle.

Example : Ground point ”BO” is described on page 50 of this manual and is installed on the back panel center.

[V] : Indicates the reference page showing the position of the splice points on the vehicle.

Example : Splice point ”I5” is on the Cowl Wire Harness and is described on page 44 of this manual.

B HOW TO USE THIS MANUAL

The ground points circuit diagram shows the connections from all major parts to the respective ground points. When troubleshooting a faulty ground point, checking the system circuits which use a common ground may help you identify the problem ground quickly. The relationship between ground points (EA, IB and IC shown below) can also be checked this way.

I GROUND POINT

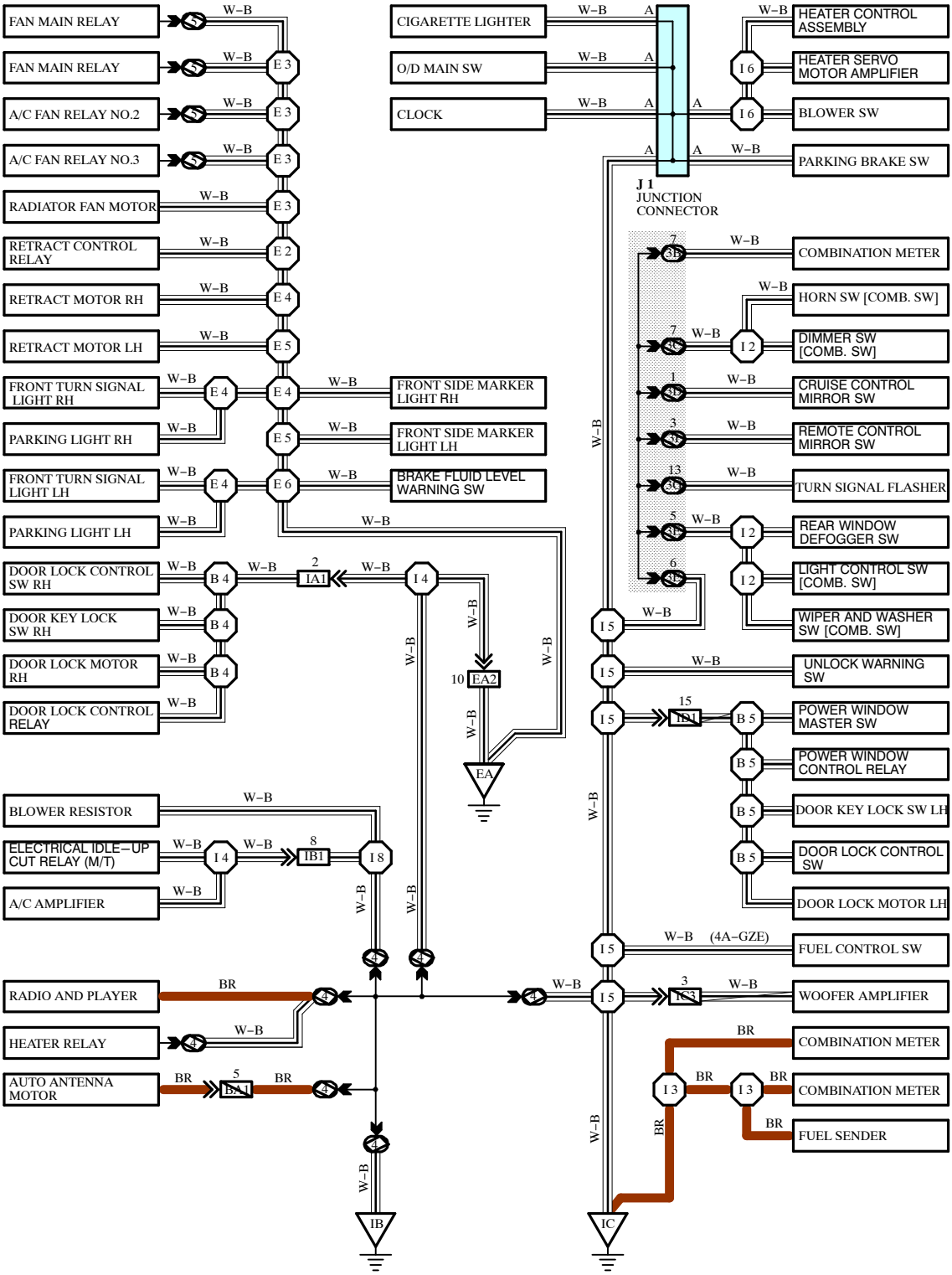

* The system shown here is an EXAMPLE ONLY. It is different to the actual circuit shown in the SYSTEM CIRCUITS SECTION.

The ”Current Flow Chart” section, describes which parts each power source (fuses, fusible links, and circuit breakers) transmits current to. In the Power Source circuit diagram, the conditions when battery power is supplied to each system are explained. Since all System Circuit diagrams start from the power source, the power source system must be fully understood.

J POWER SOURCE (Current Flow Chart)

The chart below shows the route by which current flows from the battery to each electrical source (Fusible Link, Circuit Breaker, Fuse, etc.) and other parts.

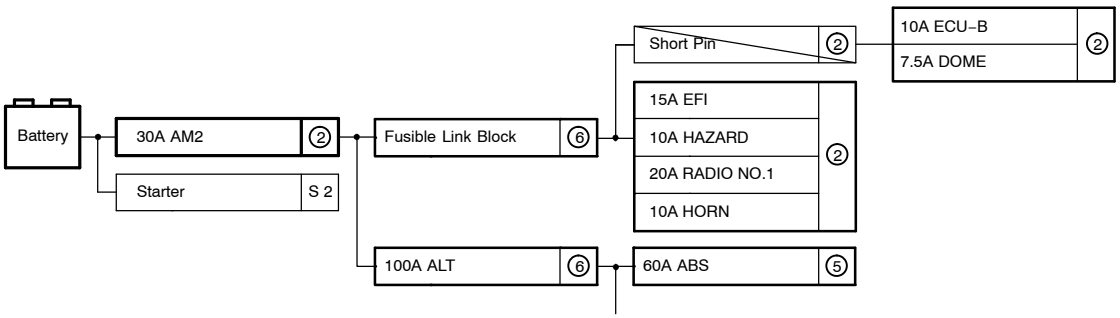

Engine Room R/B (See Page 20)

Fuse		System	Page
20A	STOP	ABS ABS and Traction Control Cruise Control Electronically Controlled Transmission and A/T Indicator Multiplex Communication System	194 187 180 166 210
10A	DOME	Cigarette Lighter and Clock Combination Meter Headlight Interior Light Key Reminder and Seat Belt Warning Light Auto Turn Off Theft Deterrent and Door L	214 230 112 122

POWER SOURCE

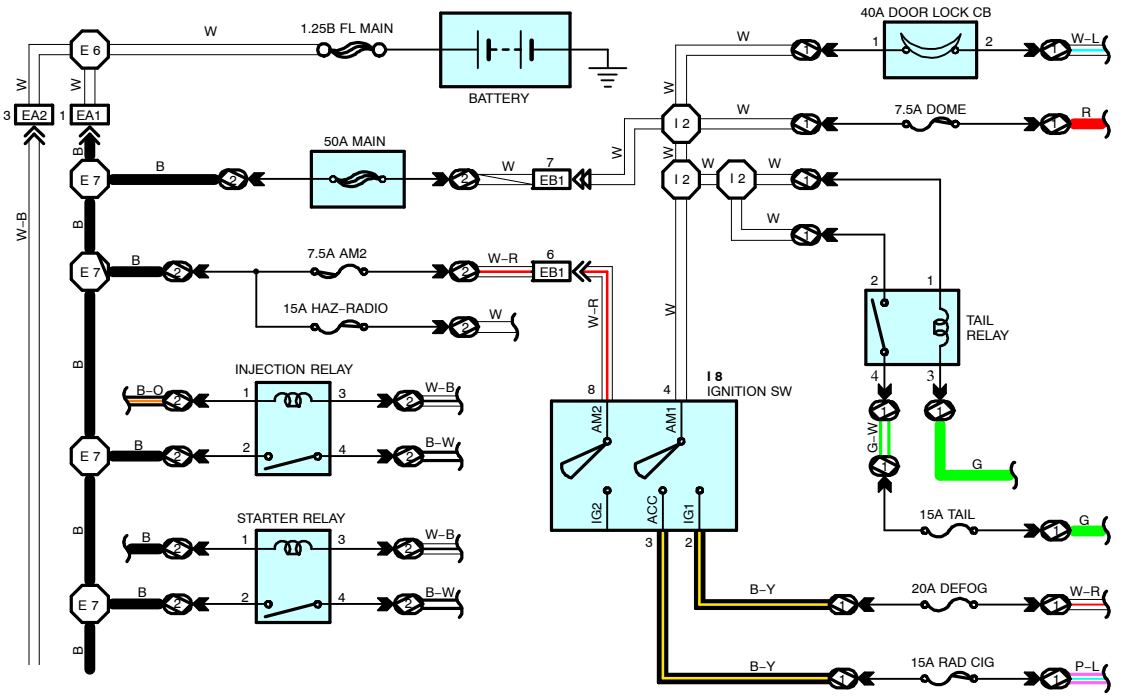

＊ The system shown here is an EXAMPLE ONLY. It is different to the actual circuit shown in the SYSTEM CIRCUITS SECTION.

K CONNECTOR LIST

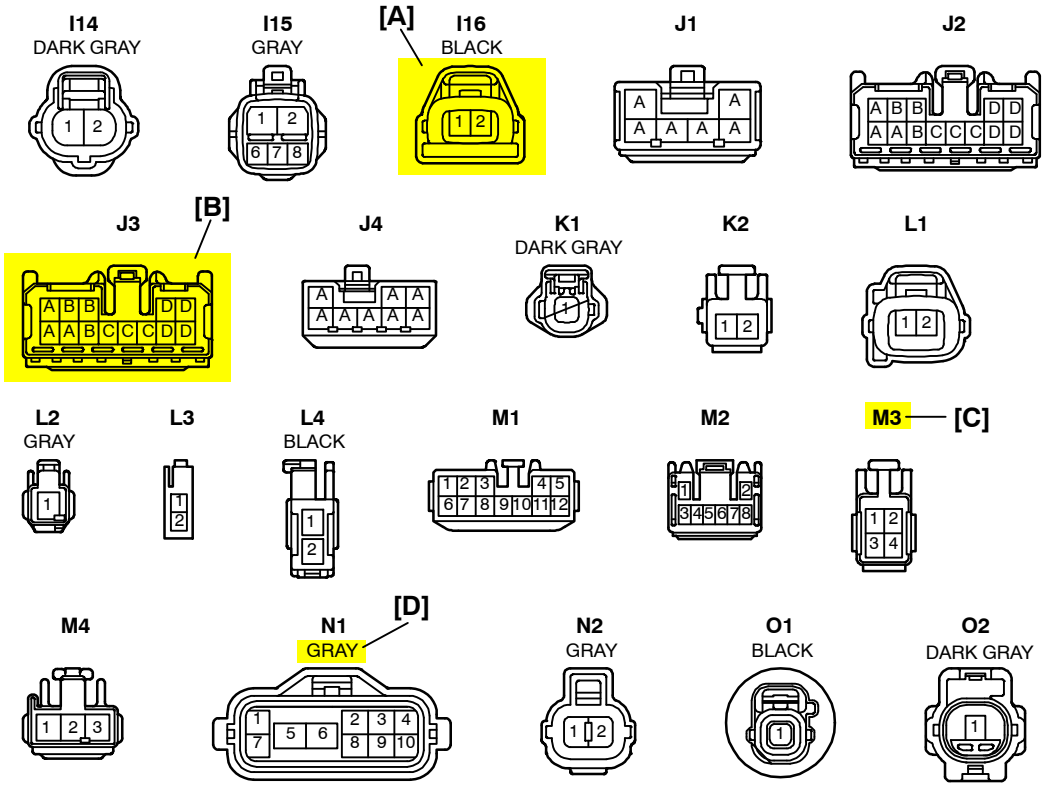

[A] : Indicates connector to be connected to a part. (The numeral indicates the pin No.)

[B] : Junction Connector
Indicates a connector which is connected to a short terminal.

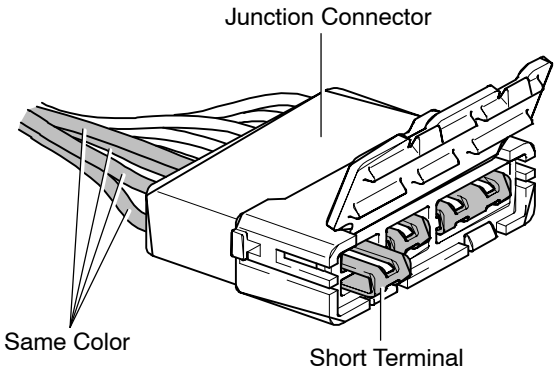

Junction connector in this manual include a short terminal which is connected to a number of wire harnesses. Always perform inspection with the short terminal installed. (When installing the wire harnesses, the harnesses can be connected to any position within the short terminal grouping. Accordingly, in other vehicles, the same position in the short terminal may be connected to a wire harness from a different part.)
Wire harness sharing the same short terminal grouping have the same color.

[C] : Parts Code
The first letter of the code is taken from the first letter of part, and the numbers indicates its order in parts which start with the same letter.

[D] : Connector Color
Connectors not indicated are milky white in color.

L PART NUMBER OF CONNECTORS

Code	Part Name	Part Number	Code	Part Name	Part Number
A 1	A/C Ambient Temp. Sensor	90980–11070	D 4	Diode (Door Courtesy Light)	90980–11608
A 2	A/C Condenser Fan Motor	90980–11237	D 5	Diode (Key Off Operation)	90980–10962
A 3	A/C Condenser Fan Relay	90980–10940	D 6	Diode (Luggage Compartment Light)	90980–11608
A 4	A/C Triple Pressure SW (A/C Dual and Single Pressure SW)	90980–10943	D 7	Door Lock Control Relay	90980–10848
[A]	A/T Oil Temp. Sensor [B]	909 [C] 413	D 8	Door Courtesy Light LH	90980–11148
A 6	ABS Actuator	90980–11151	D 9	Door Courtesy Light RH	
A 7	ABS Actuator	90980–11009	D10	Door Courtesy SW LH	90980–11097
A 8	ABS Speed Sensor Front LH	90980–10941	D11	Door Courtesy SW RH	
A 9	ABS Speed Sensor Front RH	90980–11002	D12	Door Courtesy SW Front LH	90980–11156
A10	Airbag Sensor Front LH	90980–11856	D13	Door Courtesy SW Front RH	
A11	Airbag Sensor Front RH		D14	Door Courtesy SW Rear LH	
A12	[illegible]	90980–11194	D15	Door Courtesy SW Rear RH	
		90980–[illegible]	D16	[illegible] Unlock SW LH	90980–11170
				[illegible]	

[A] : Part Code

[B] : Part Name

[C] : Part Number
Toyota Part Number are indicated.

Not all of the above part numbers of the connector are established for the supply. In case of ordering a connector or terminal with wire, please confirm in advance if there is supply for it using “Parts Catalog News” (published by Parts Engineering Administration Dept.).

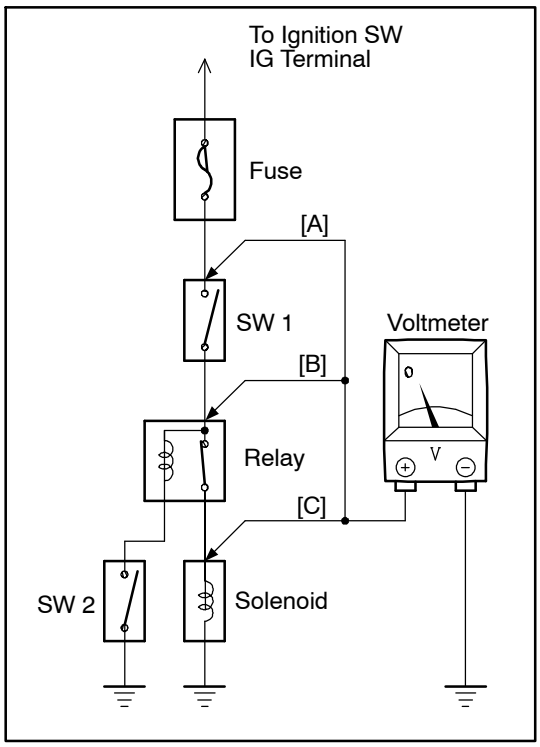

VOLTAGE CHECK

(a) Establish conditions in which voltage is present at the check point.

Example:
[A] – Ignition SW on
[B] – Ignition SW and SW 1 on
[C] – Ignition SW, SW 1 and Relay on (SW 2 off)

(b) Using a voltmeter, connect the negative lead to a good ground point or negative battery terminal, and the positive lead to the connector or component terminal.
This check can be done with a test light instead of a voltmeter.

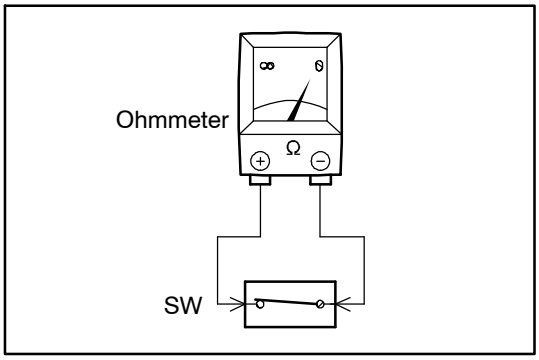

CONTINUITY AND RESISTANCE CHECK

(a) Disconnect the battery terminal or wire so there is no voltage between the check points.

(b) Contact the two leads of an ohmmeter to each of the check points.

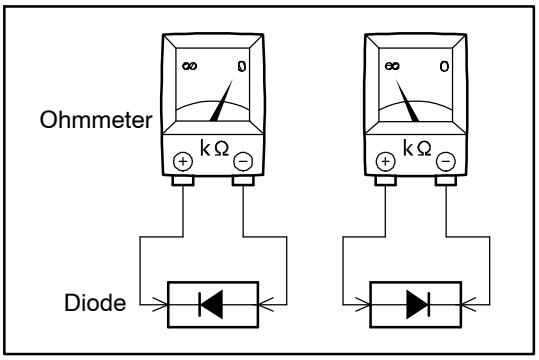

If the circuit has diodes, reverse the two leads and check again.
When contacting the negative lead to the diode positive side and the positive lead to the negative side, there should be continuity.
When contacting the two leads in reverse, there should be no continuity.

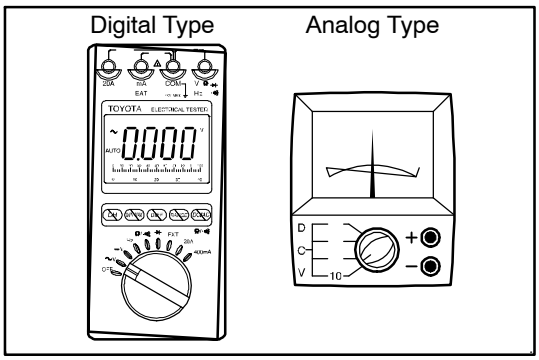

(c) Use a volt/ohmmeter with high impedance (10 kΩ/V minimum) for troubleshooting of the electrical circuit.

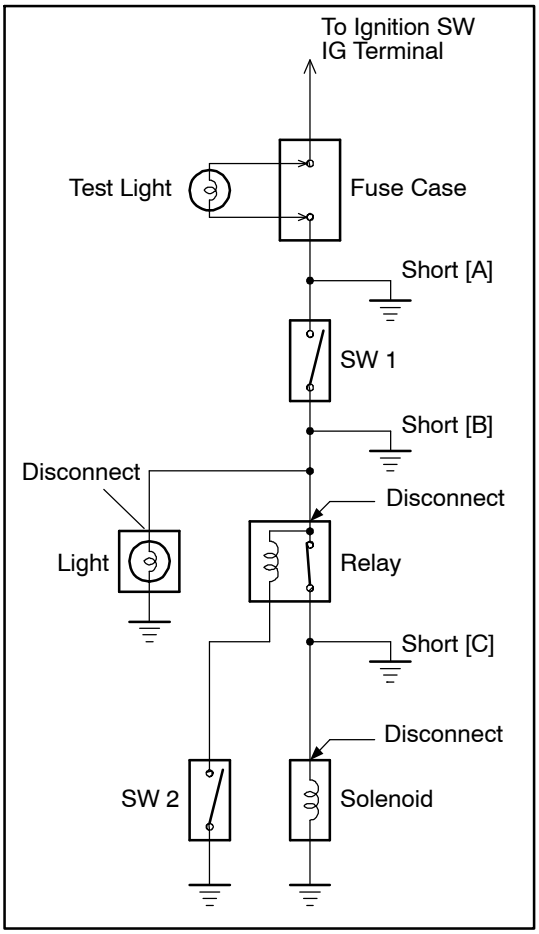

FINDING A SHORT CIRCUIT

(a) Remove the blown fuse and disconnect all loads of the fuse.

(b) Connect a test light in place of the fuse.

(c) Establish conditions in which the test light comes on.

Example:
[A] – Ignition SW on
[B] – Ignition SW and SW 1 on
[C] – Ignition SW, SW 1 and Relay on (Connect the Relay) and SW 2 off (or Disconnect SW 2)

(d) Disconnect and reconnect the connectors while watching the test light.
The short lies between the connector where the test light stays lit and the connector where the light goes out.

(e) Find the exact location of the short by lightly shaking the problem wire along the body.

CAUTION:

(a) Do not open the cover or the case of the ECU unless absolutely necessary. (If the IC terminals are touched, the IC may be destroyed by static electricity.)

(b) When replacing the internal mechanism (ECU part) of the digital meter, be careful that no part of your body or clothing comes in contact with the terminals of leads from the IC, etc. of the replacement part (spare part).

DISCONNECTION OF MALE AND FEMALE CONNECTORS

To pull apart the connectors, pull on the connector itself, not the wire harness.

HINT : Check to see what kind of connector you are disconnecting before pulling apart.

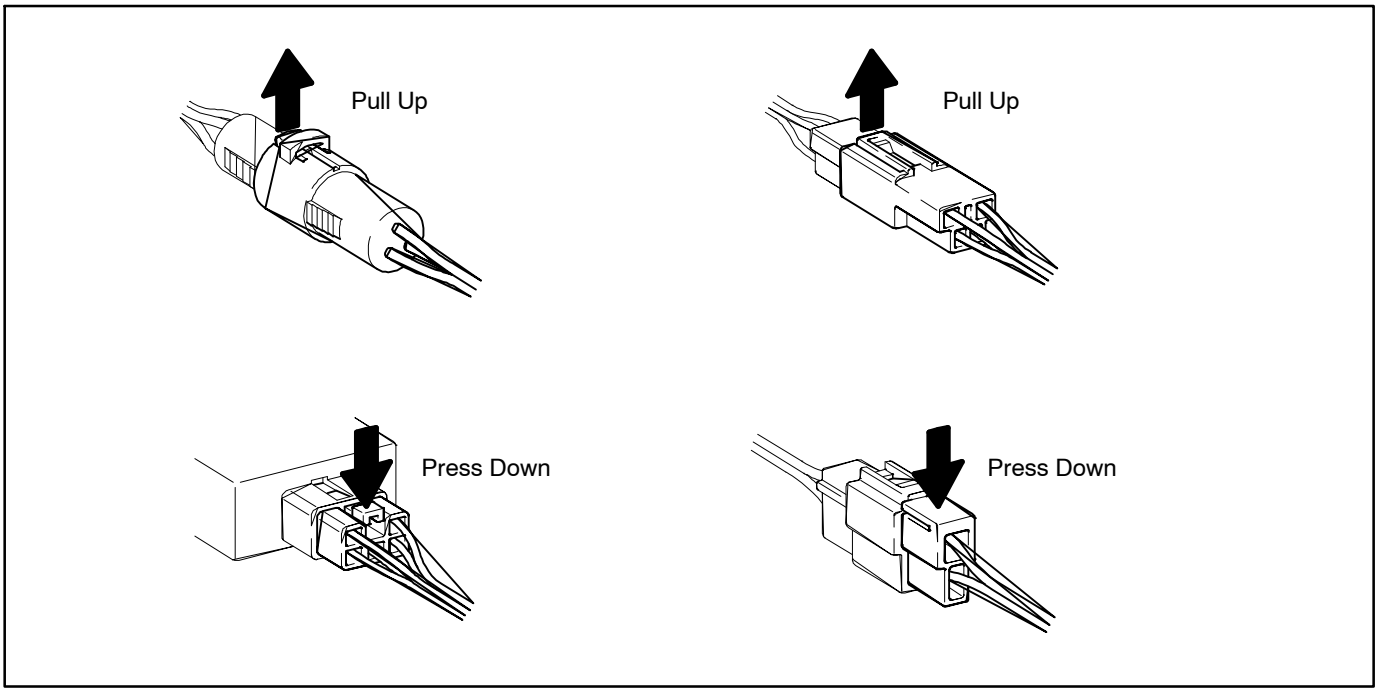

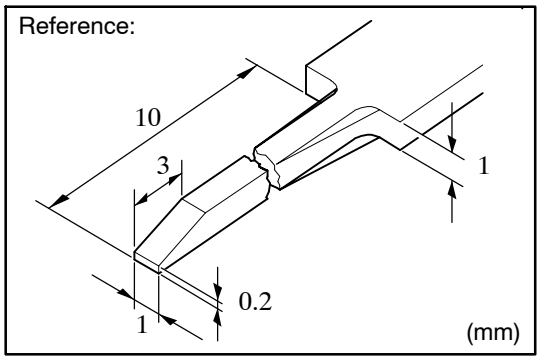

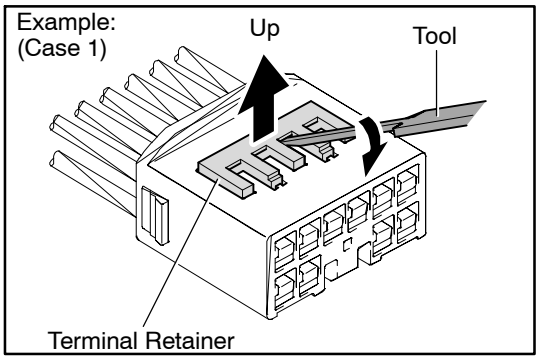

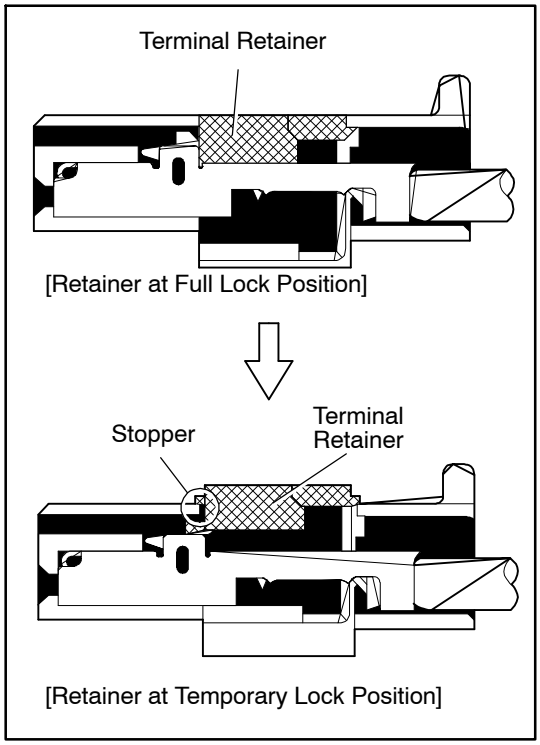

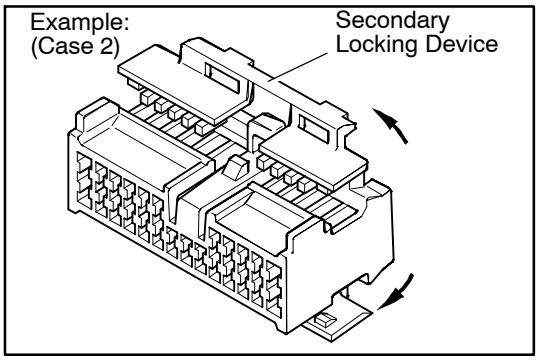

HOW TO REPLACE TERMINAL (with terminal retainer or secondary locking device)

1. PREPARE THE SPECIAL TOOL

   HINT : To remove the terminal from the connector, please construct and use the special tool or like object shown on the left.

2. DISCONNECT CONNECTOR

3. DISENGAGE THE SECONDARY LOCKING DEVICE OR TERMINAL RETAINER.

   (a) Locking device must be disengaged before the terminal locking clip can be released and the terminal removed from the connector.

   (b) Use a special tool or the terminal pick to unlock the secondary locking device or terminal retainer.

   NOTICE:
   Do not remove the terminal retainer from connector body.

   [A] For Non−Waterproof Type Connector

   HINT : The needle insertion position varies according to the connector's shape (number of terminals etc.), so check the position before inserting it.

   "Case 1"

   Raise the terminal retainer up to the temporary lock position.

   "Case 2"

   Open the secondary locking device.

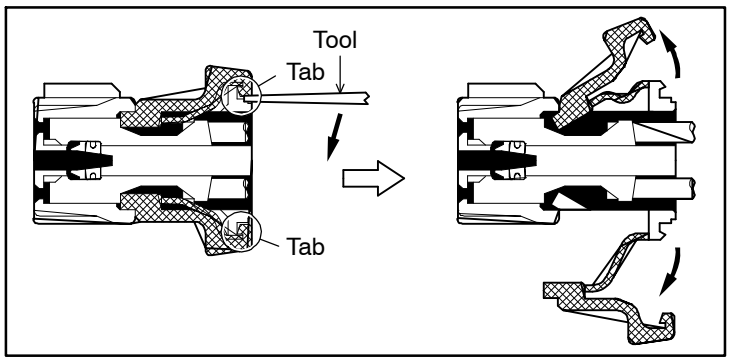

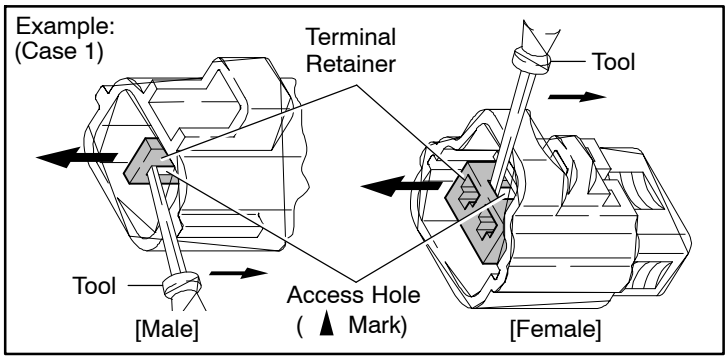

[B] For Waterproof Type Connector

HINT : Terminal retainer color is different according to connector body.

Example:

Terminal Retainer	: Connector Body
Black or White	: Gray
Black or White	: Dark Gray
Gray or White	: Black

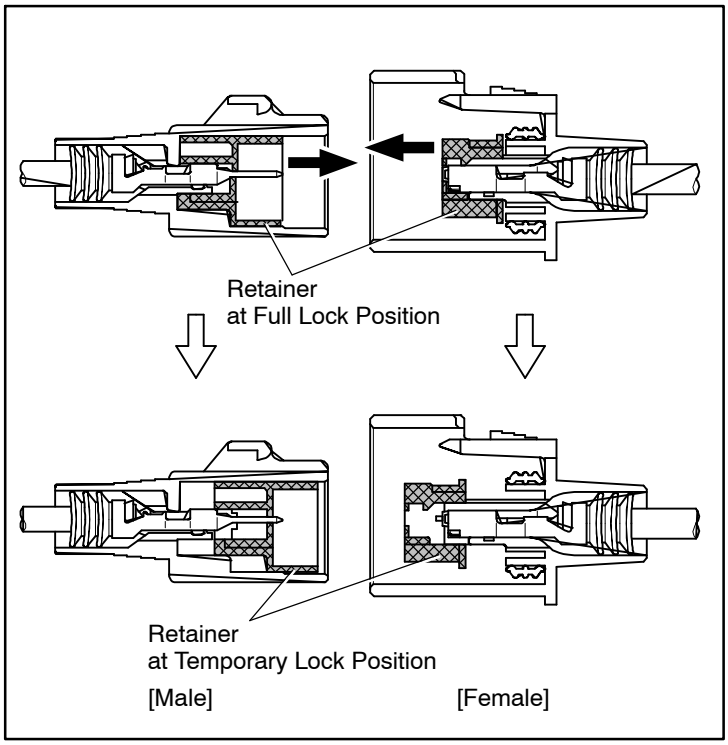

”Case 1”
Type where terminal retainer is pulled up to the temporary lock position (Pull Type).

Insert the special tool into the terminal retainer access hole (▲Mark) and pull the terminal retainer up to the temporary lock position.

HINT : The needle insertion position varies according to the connector’s shape (Number of terminals etc.), so check the position before inserting it.

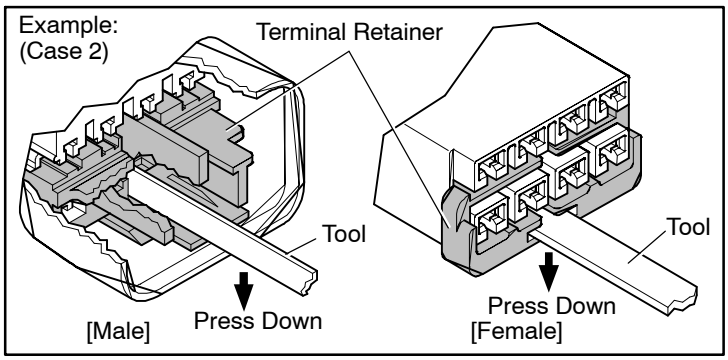

”Case 2”
Type which cannot be pulled as far as Power Lock insert the tool straight into the access hole of terminal retainer as shown.

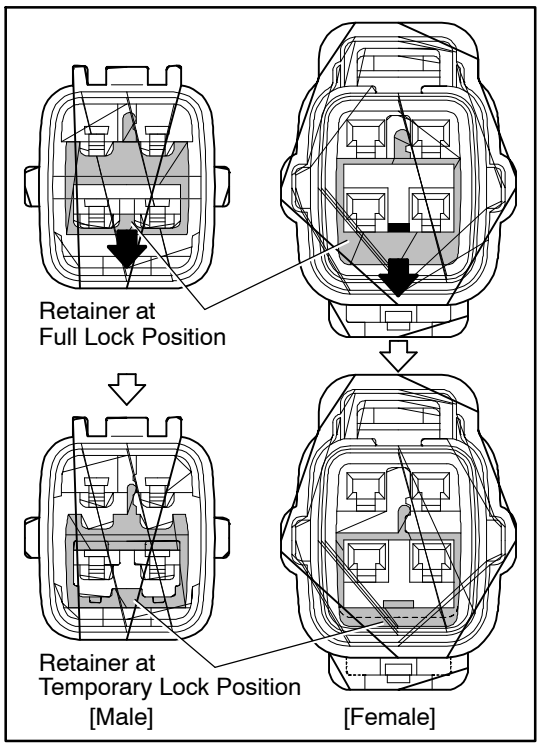

Push the terminal retainer down to the temporary lock position.

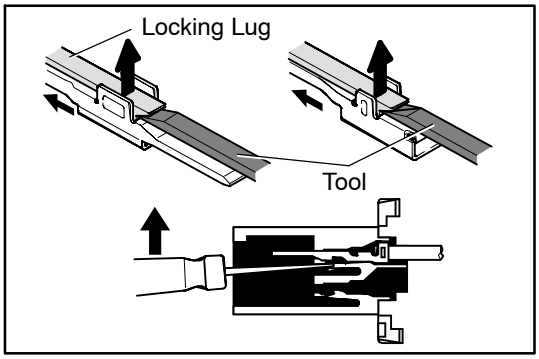

(c) Release the locking lug from terminal and pull the terminal out from rear.

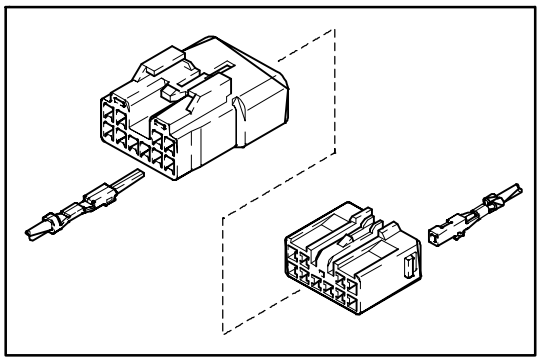

4. INSTALL TERMINAL TO CONNECTOR

(a) Insert the terminal.

HINT:
1. Make sure the terminal is positioned correctly.
2. Insert the terminal until the locking lug locks firmly.
3. Insert the terminal with terminal retainer in the temporary lock position.

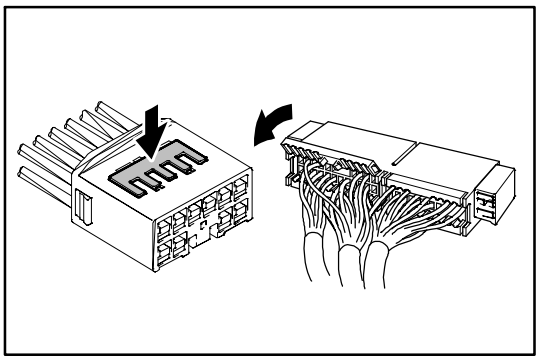

(b) Push the secondary locking device or terminal retainer in to the full lock position.

5. CONNECT CONNECTOR

ABBREVIATIONS

The following abbreviations are used in this manual.

ABS	=	Anti−Lock Brake System
A/C	=	Air Conditioning
ACIS	=	Acoustic Control Induction System
A/T	=	Automatic Transaxle
COMB.	=	Combination
ECU	=	Electronic Control Unit
EFI	=	Electronic Fuel Injection
ESA	=	Electronic Spark Advance
EVAP	=	Evaporative Emission
FL	=	Fusible Link
IC	=	Integrated Circuit
J/B	=	Junction Block
LH	=	Left−Hand
MPX	=	Multiplex
M/T	=	Manual Transaxle
O/D	=	Overdrive
R/B	=	Relay Block
RH	=	Right−Hand
SFI	=	Sequential Multiport Fuel Injection
SRS	=	Supplemental Restraint System
SW	=	Switch
TEMP.	=	Temperature
VSV	=	Vacuum Switching Valve
w/	=	With
w/o	=	Without

∗ The titles given inside the components are the names of the terminals (terminal codes) and are not treated as being abbreviations.

E GLOSSARY OF TERMS AND SYMBOLS

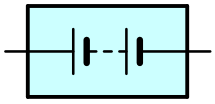

BATTERY
Stores chemical energy and converts it into electrical energy. Provides DC current for the auto's various electrical circuits.

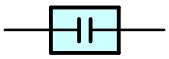

CAPACITOR (Condenser)
A small holding unit for temporary storage of electrical voltage.

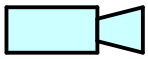

CIGARETTE LIGHTER
An electric resistance heating element.

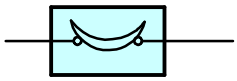

CIRCUIT BREAKER
Basically a reusable fuse, a circuit breaker will heat and open if too much current flows through it. Some units automatically reset when cool, others must be manually reset.

DIODE
A semiconductor which allows current flow in only one direction.

DIODE, ZENER
A diode which allows current flow in one direction but blocks reverse flow only up to a specific voltage. Above that potential, it passes the excess voltage. This acts as a simple voltage regulator.

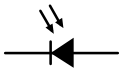

PHOTODIODE
The photodiode is a semiconductor which controls the current flow according to the amount of light.

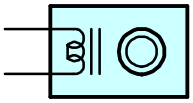

DISTRIBUTOR, IIA
Channels high–voltage current from the ignition coil to the individual spark plugs.

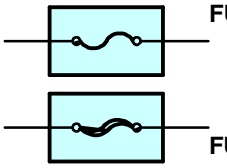

(for Medium Current Fuse)

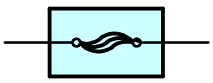

(for High Current Fuse or Fusible Link)

FUSE
A thin metal strip which burns through when too much current flows through it, thereby stopping current flow and protecting a circuit from damage.

FUSIBLE LINK
A heavy–gauge wire placed in high amperage circuits which burns through on overloads, thereby protecting the circuit. The numbers indicate the crosssection surface area of the wires.

1. SINGLE FILAMENT

2. DOUBLE FILAMENT

HEADLIGHTS
Current flow causes a headlight filament to heat up and emit light. A headlight may have either a single (1) filament or a double (2) filament

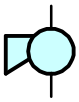

HORN
An electric device which sounds a loud audible signal.

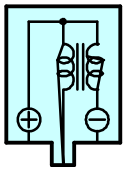

IGNITION COIL
Converts low–voltage DC current into high–voltage ignition current for firing the spark plugs.

LIGHT
Current flow through a filament causes the filament to heat up and emit light.

LED (LIGHT EMITTING DIODE)
Upon current flow, these diodes emit light without producing the heat of a comparable light.

METER, ANALOG
Current flow activates a magnetic coil which causes a needle to move, thereby providing a relative display against a background calibration.

METER, DIGITAL
Current flow activates one or many LED's, LCD's, or fluorescent displays, which provide a relative or digital display.

MOTOR
A power unit which converts electrical energy into mechanical energy, especially rotary motion.

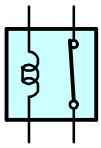

RELAY

1. NORMALLY CLOSED

Basically, an electrically operated switch which may be normally closed (1) or open (2).
Current flow through a small coil creates a magnetic field which either opens or closes an attached switch.

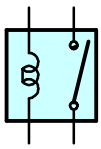

2. NORMALLY OPEN

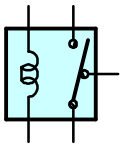

RELAY, DOUBLE THROW

A relay which passes current through one set of contacts or the other.

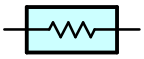

RESISTOR

An electrical component with a fixed resistance, placed in a circuit to reduce voltage to a specific value.

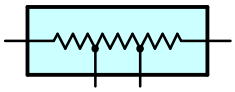

RESISTOR, TAPPED

A resistor which supplies two or more different non adjustable resistance values.

RESISTOR, VARIABLE or RHEOSTAT

A controllable resistor with a variable rate of resistance.
Also called a potentiometer or rheostat.

SENSOR (Thermistor)

A resistor which varies its resistance with temperature.

(Reed Switch Type)

SENSOR, SPEED

Uses magnetic impulses to open and close a switch to create a signal for activation of other components.

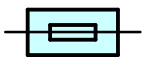

SHORT PIN

Used to provide an unbroken connection within a junction block.

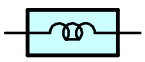

SOLENOID

An electromagnetic coil which forms a magnetic field when current flows, to move a plunger, etc.

SPEAKER

An electromechanical device which creates sound waves from current flow.

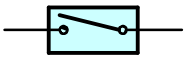

SWITCH, MANUAL

1. NORMALLY OPEN

Opens and closes circuits, thereby stopping (1) or allowing (2) current flow.

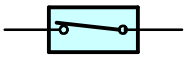

2. NORMALLY CLOSED

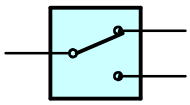

SWITCH, DOUBLE THROW

A switch which continuously passes current through one set of contacts or the other.

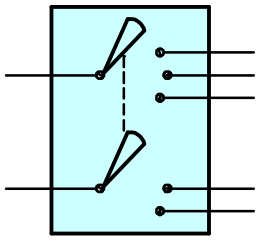

SWITCH, IGNITION

A key operated switch with several positions which allows various circuits, particularly the primary ignition circuit, to become operational.

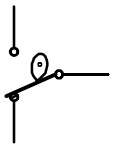

SWITCH, WIPER PARK

Automatically returns wipers to the stop position when the wiper switch is turned off.

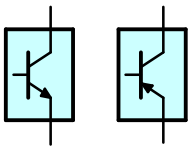

TRANSISTOR

A solidstate device typically used as an electronic relay; stops or passes current depending on the voltage applied at ”base”.

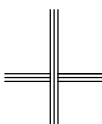

WIRES

(1) NOT CONNECTED

Wires are always drawn as straight lines on wiring diagrams.
Crossed wires (1) without a black dot at the junction are not joined;
crossed wires (2) with a black dot or octagonal ( ) mark at the junction are spliced (joined) connections.

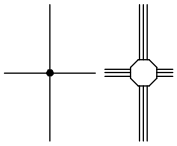

(2) SPLICED

[Engine Compartment]

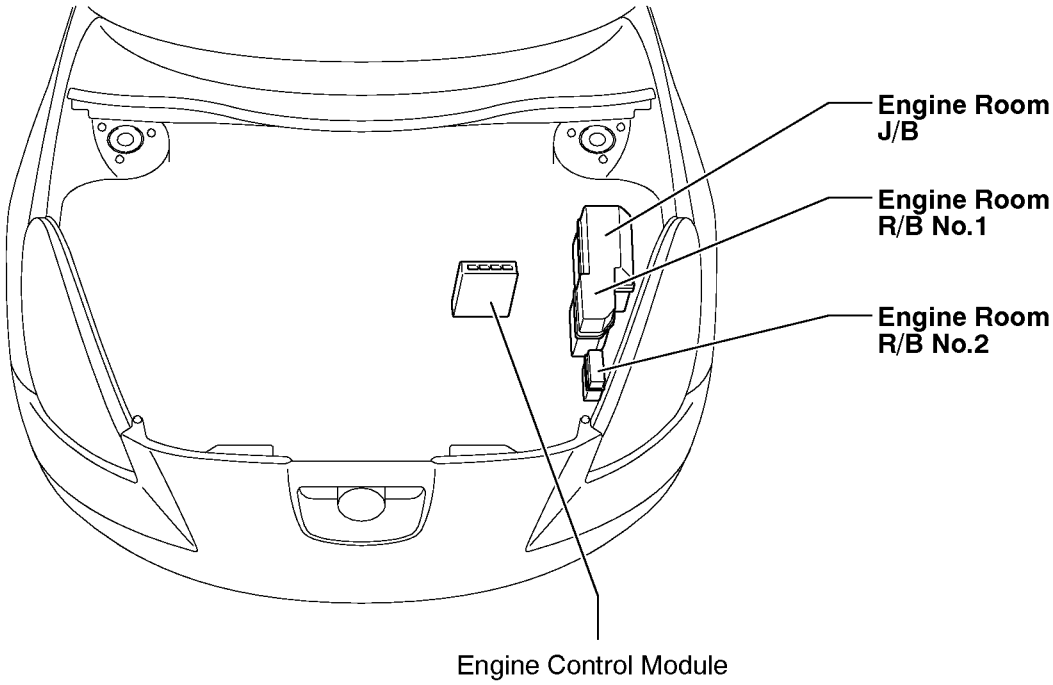

[Instrument Panel]

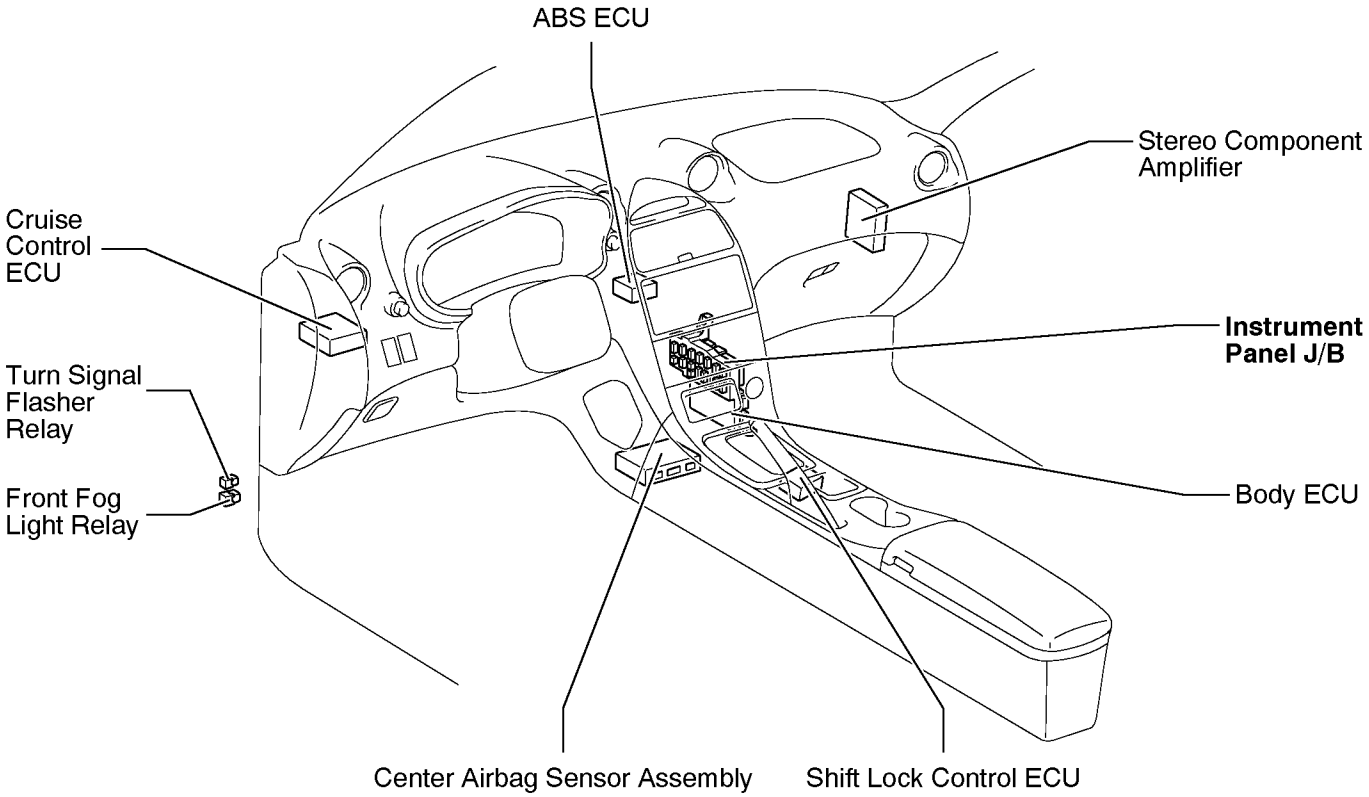

[Body]

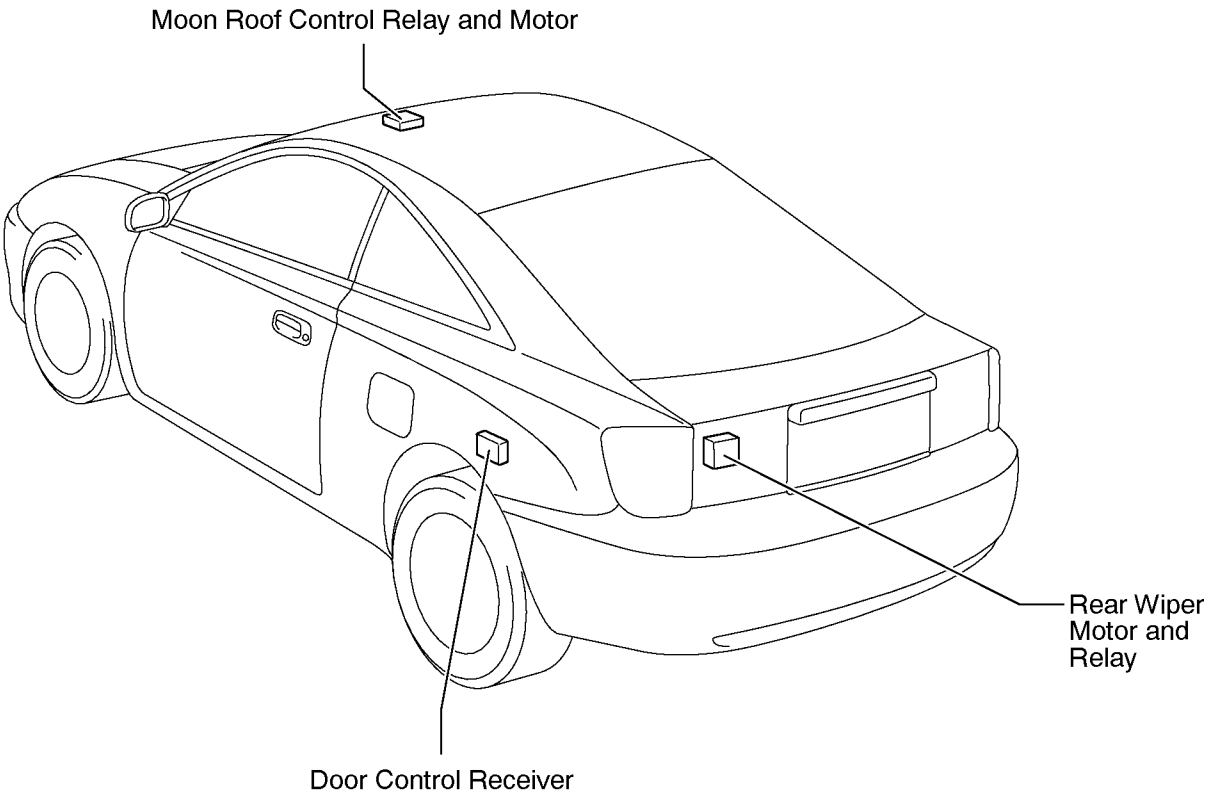
Moon Roof Control Relay and Motor
Rear Wiper Motor and Relay
Door Control Receiver

F RELAY LOCATIONS

: Engine Room J/B	Engine Compartment Left (See Page 20)

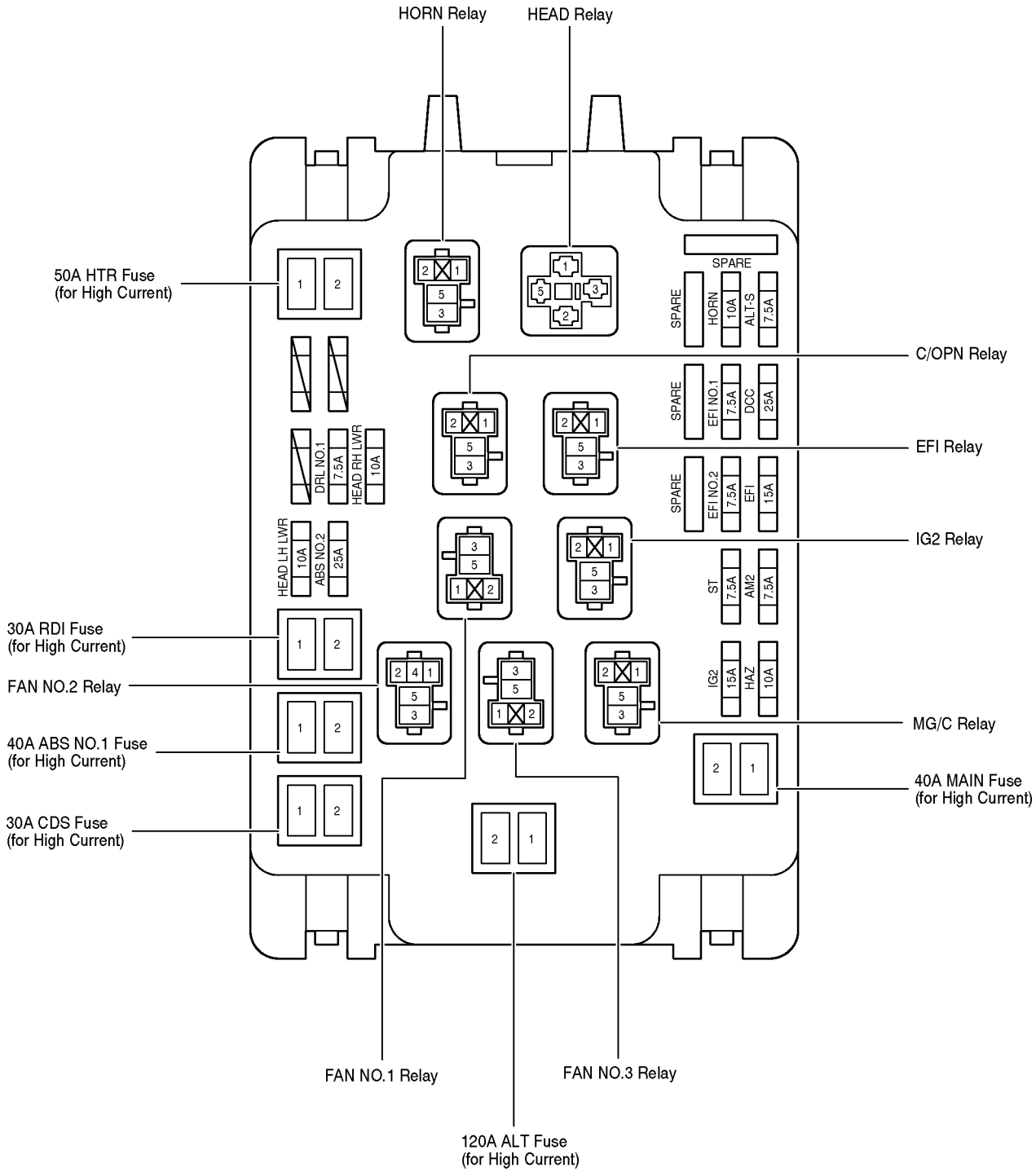

(Inner Circuit : See Page 28)

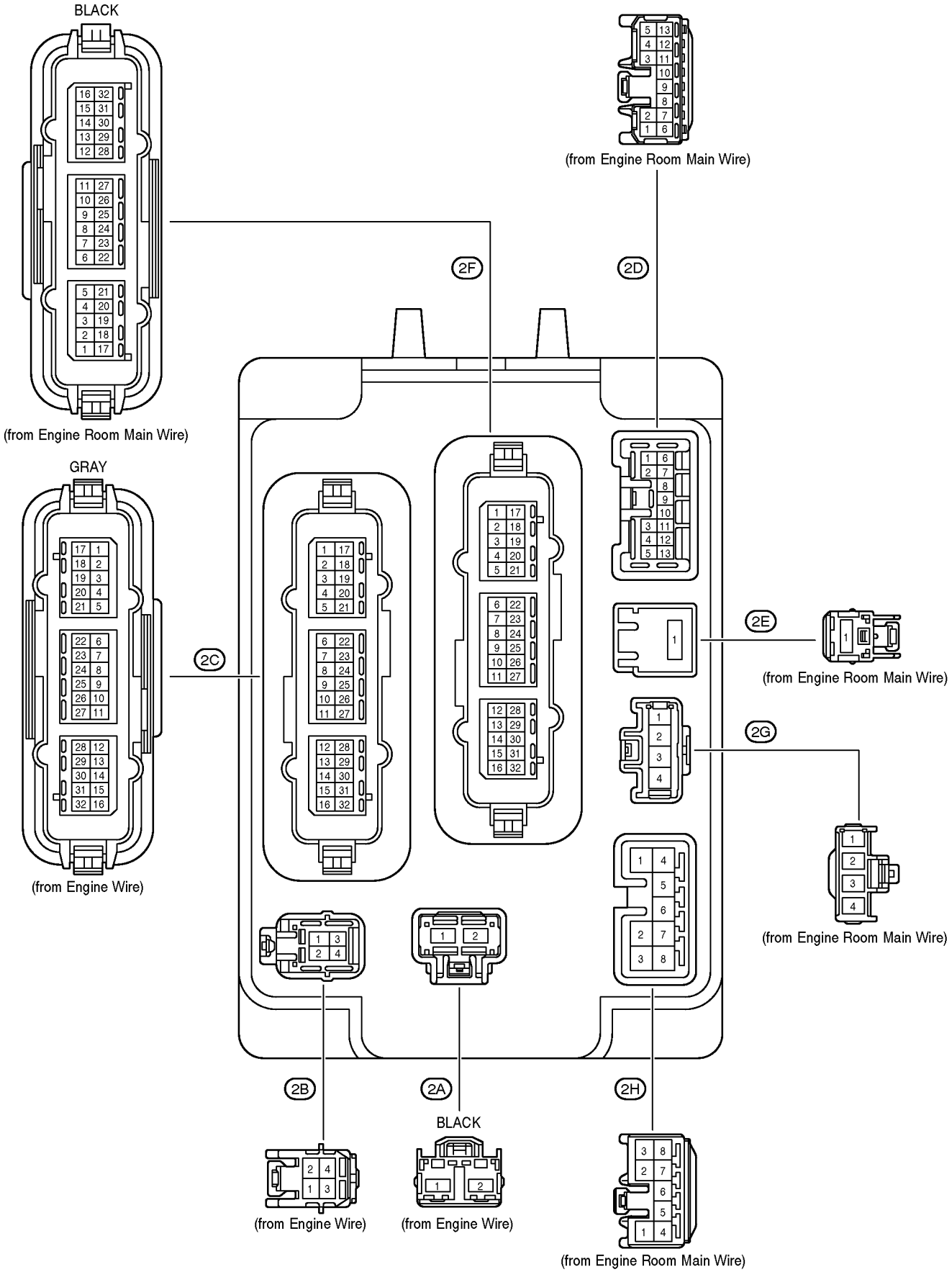

F RELAY LOCATIONS

: Instrument Panel J/B	Instrument Panel Brace RH (See Page 21)

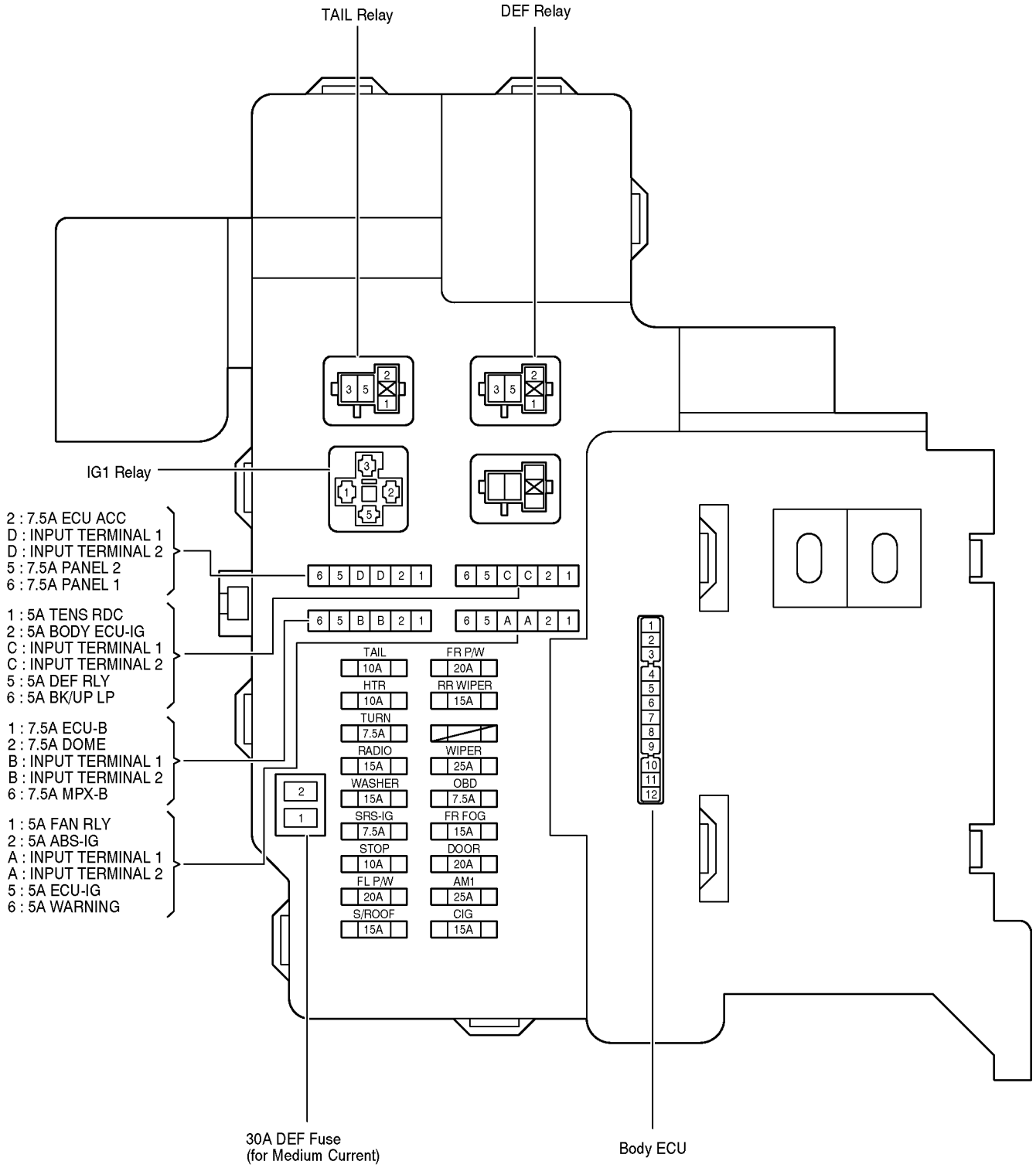

(Inner Circuit : See Page 30)

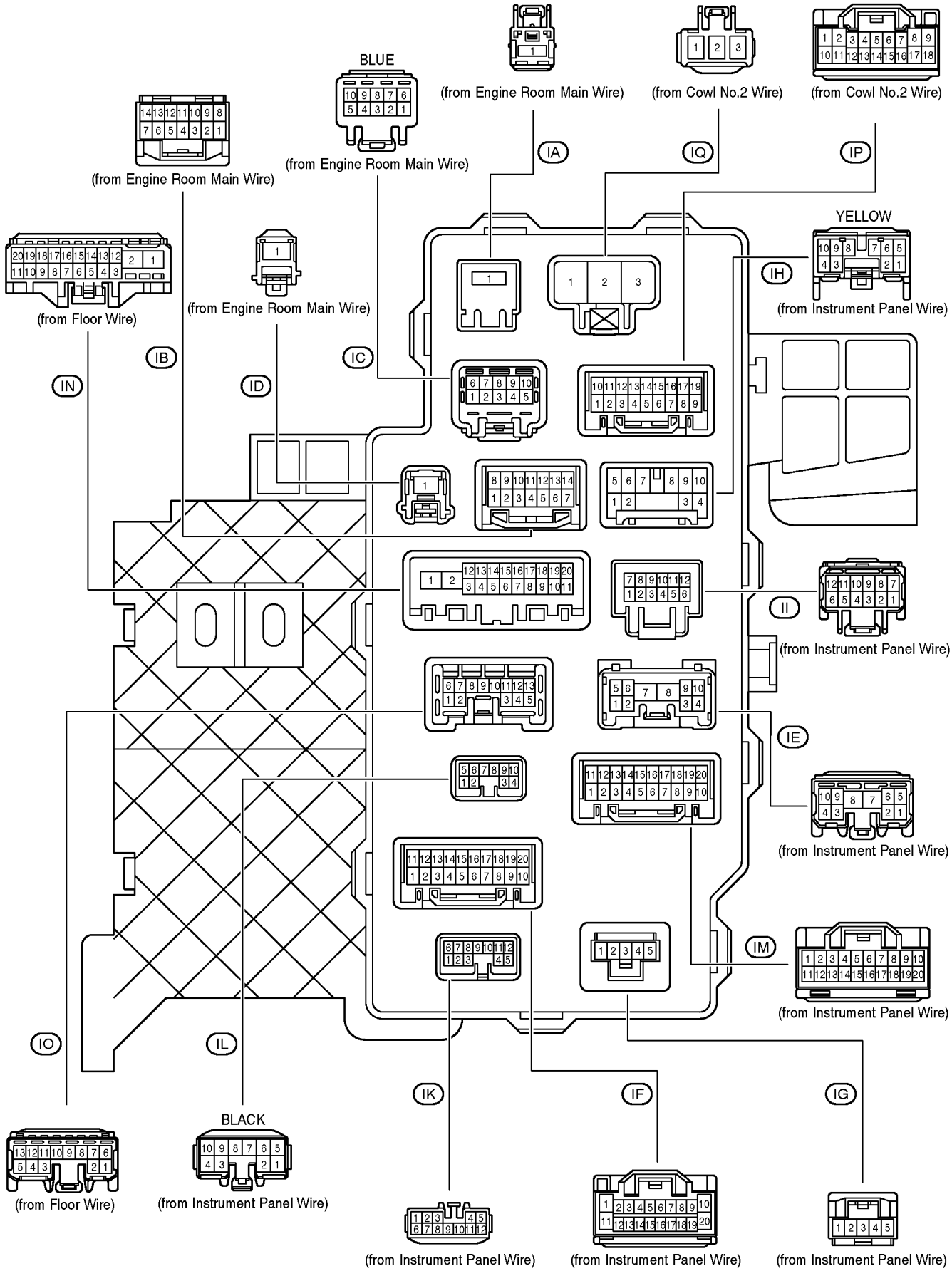

F RELAY LOCATIONS

① : Engine Room R/B No.1	Engine Compartment Left (See Page 20)

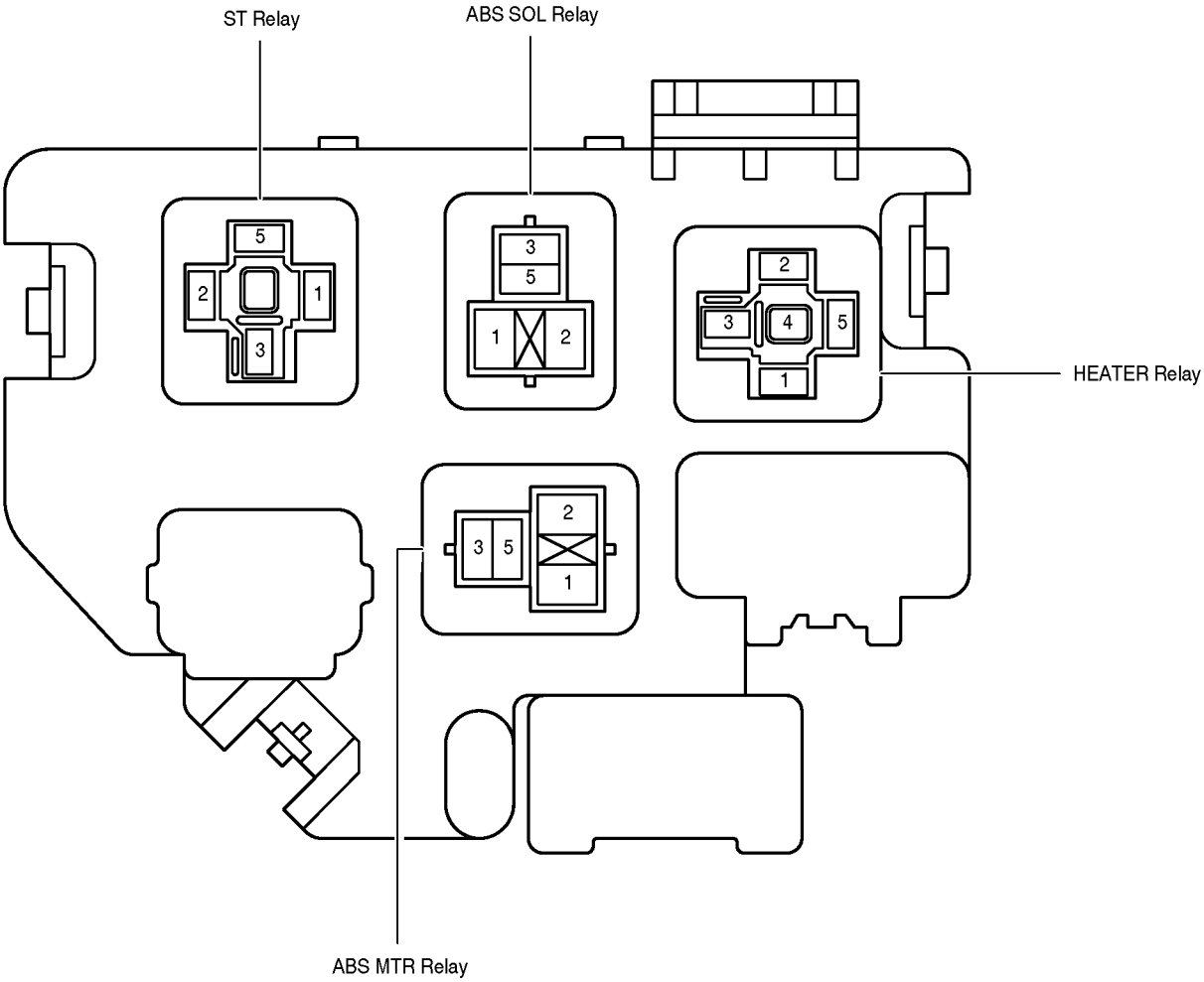
ST Relay
ABS SOL Relay
HEATER Relay
ABS MTR Relay
5
2
1
3
3
5
1
2
2
3
4
5
1
2
3
5
1

② : Engine Room R/B No.2	Engine Compartment Left (See Page 20)

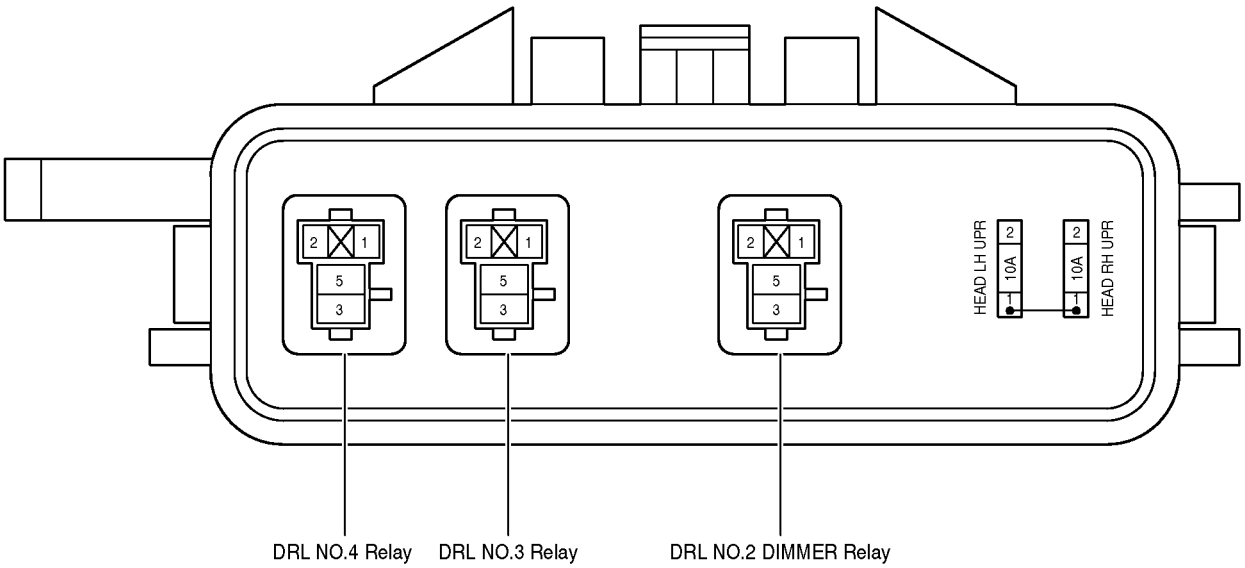

[Engine Room J/B Inner Circuit]

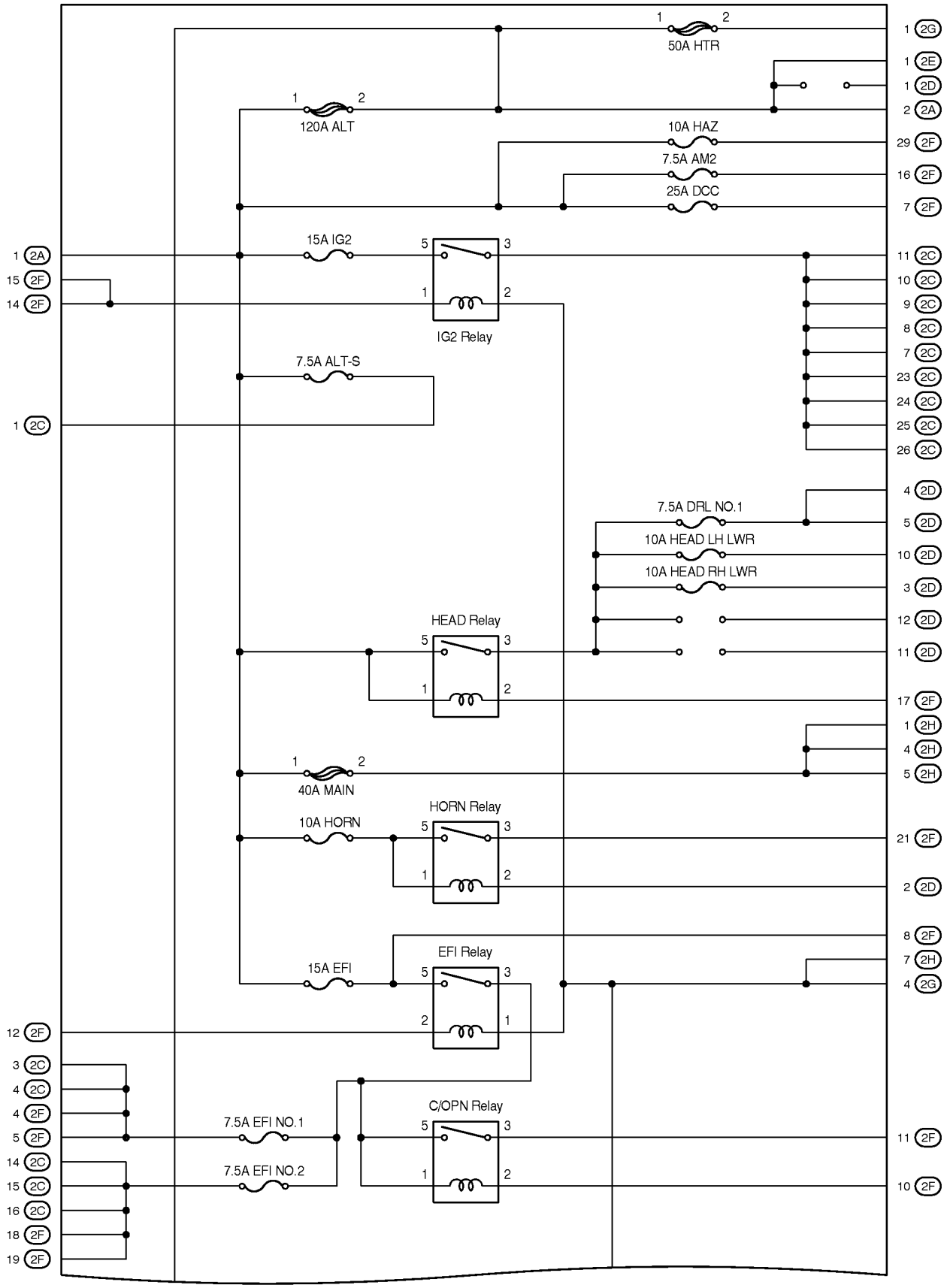

(Cont. next page)

(Cont'd)

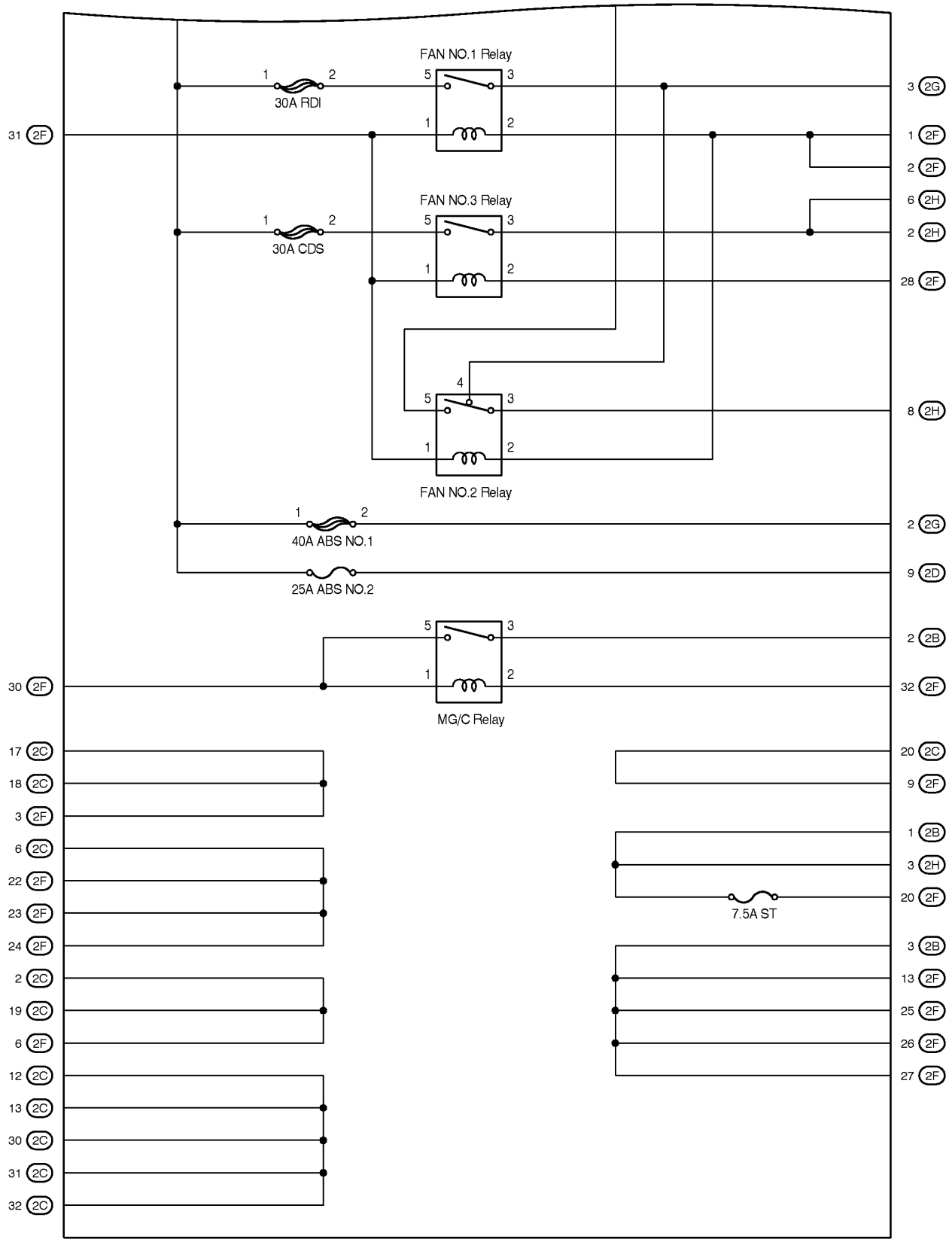
FAN NO.1 Relay
30A RDI
FAN NO.3 Relay
30A CDS
FAN NO.2 Relay
40A ABS NO.1
25A ABS NO.2
MG/C Relay
7.5A ST
31 2F
30 2F
17 2C
18 2C
3 2F
6 2C
22 2F
23 2F
24 2F
2 2C
19 2C
6 2F
12 2C
13 2C
30 2C
31 2C
32 2C
3 2G
1 2F
2 2F
6 2H
2 2H
28 2F
8 2H
2 2G
9 2D
2 2B
32 2F
20 2C
9 2F
1 2B
3 2H
20 2F
3 2B
13 2F
25 2F
26 2F
27 2F

[Instrument Panel J/B Inner Circuit]

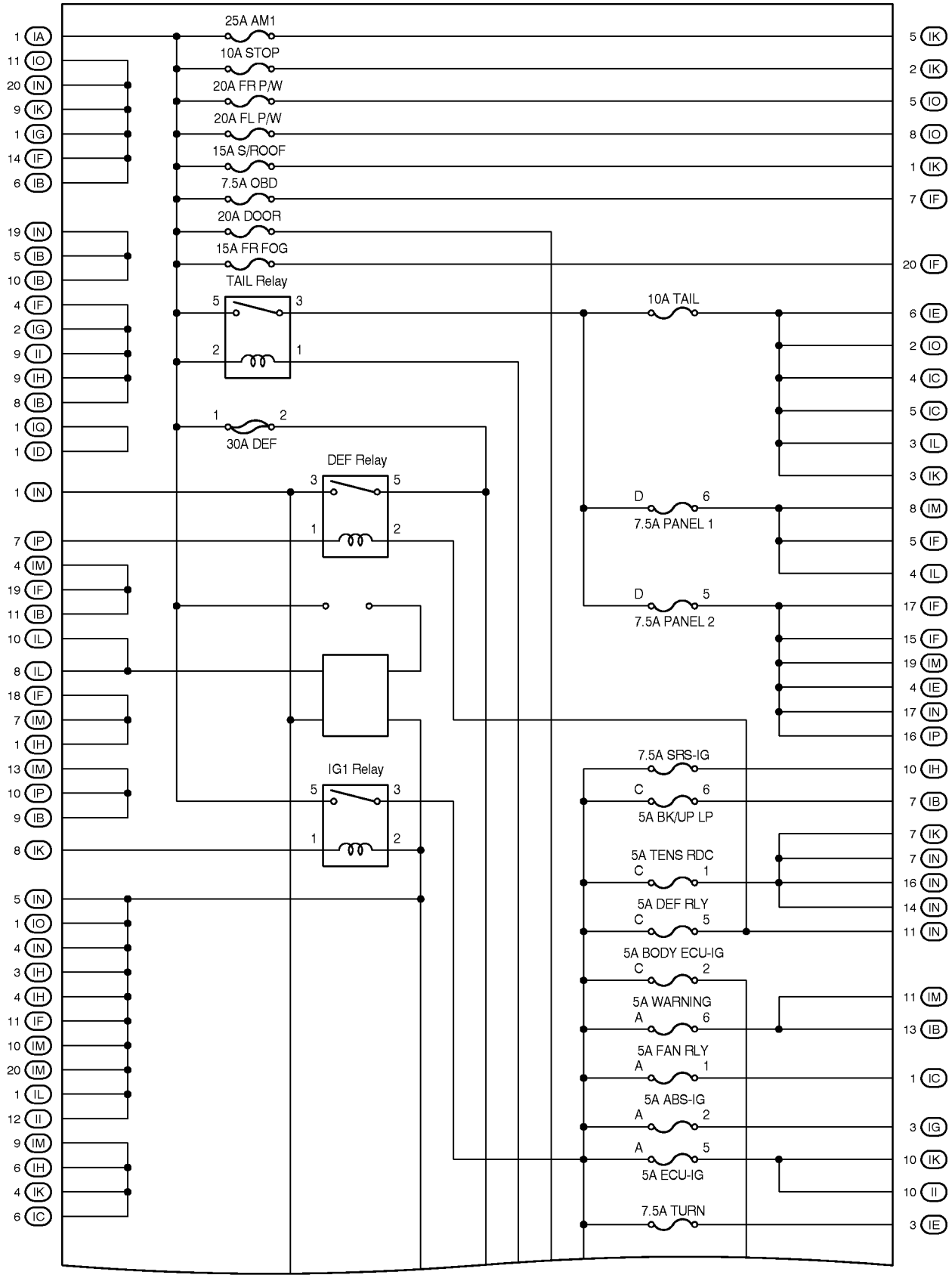

(Cont. next page)

(Cont'd)

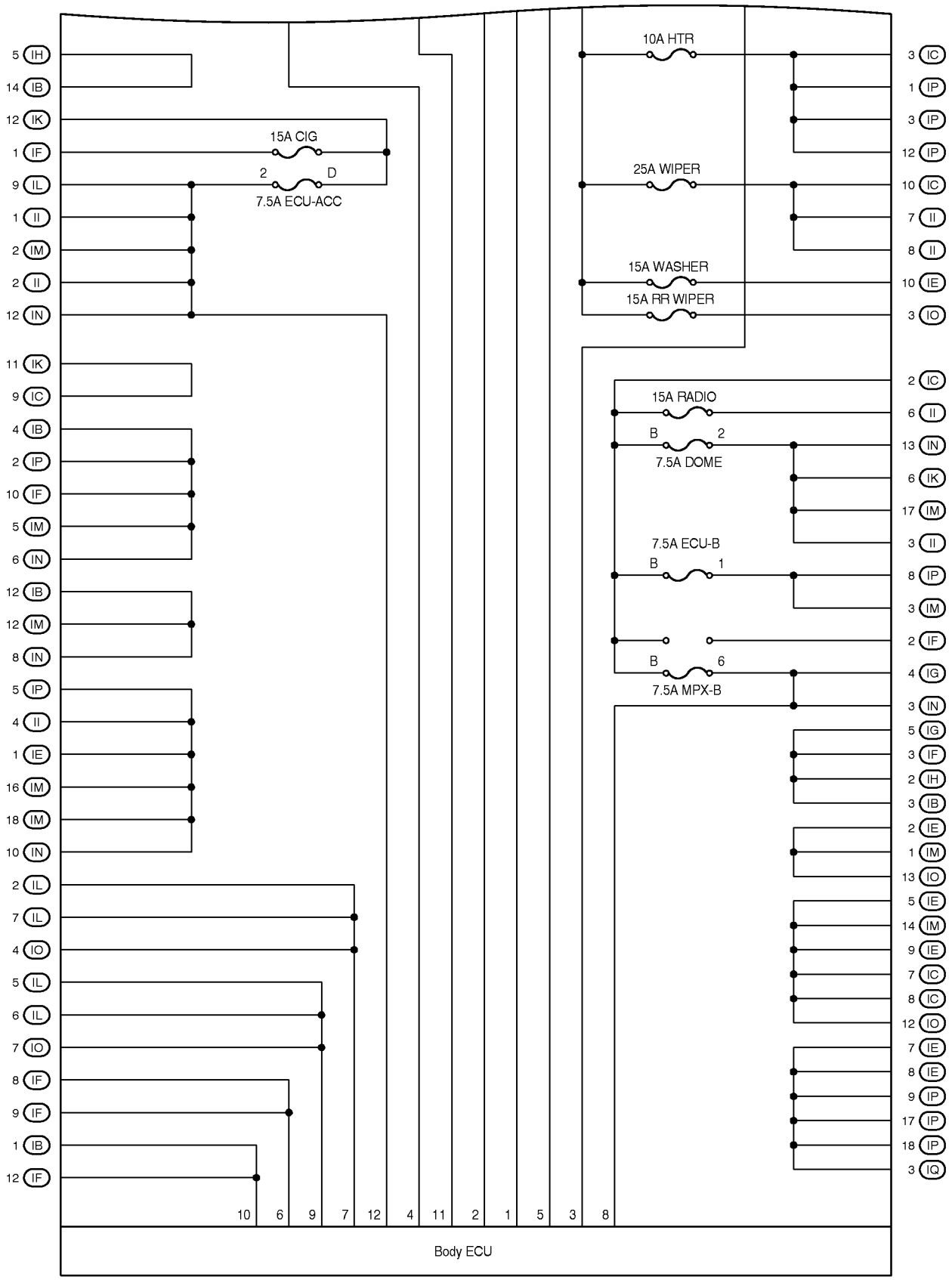
10A HTR
15A CIG
2
D
7.5A ECU-ACC
25A WIPER
15A WASHER
15A RR WIPER
15A RADIO
B
2
7.5A DOME
7.5A ECU-B
B
1
B
6
7.5A MPX-B
5 IH
14 IB
12 IK
1 IF
9 IL
1 II
2 IM
2 II
12 IN
11 IK
9 IC
4 IB
2 IP
10 IF
5 IM
6 IN
12 IB
12 IM
8 IN
5 IP
4 II
1 IE
16 IM
18 IM
10 IN
2 IL
7 IL
4 IO
5 IL
6 IL
7 IO
8 IF
9 IF
1 IB
12 IF
3 IC
1 IP
3 IP
12 IP
10 IC
7 II
8 II
10 IE
3 IO
2 IC
6 II
13 IN
6 IK
17 IM
3 II
8 IP
3 IM
2 IF
4 IG
3 IN
5 IG
3 IF
2 IH
3 IB
2 IE
1 IM
13 IO
5 IE
14 IM
9 IE
7 IC
8 IC
12 IO
7 IE
8 IE
9 IP
17 IP
18 IP
3 IQ
10
6
9
7
12
4
11
2
1
5
3
8
Body ECU

Position of Parts in Engine Compartment

[1ZZ–FE]

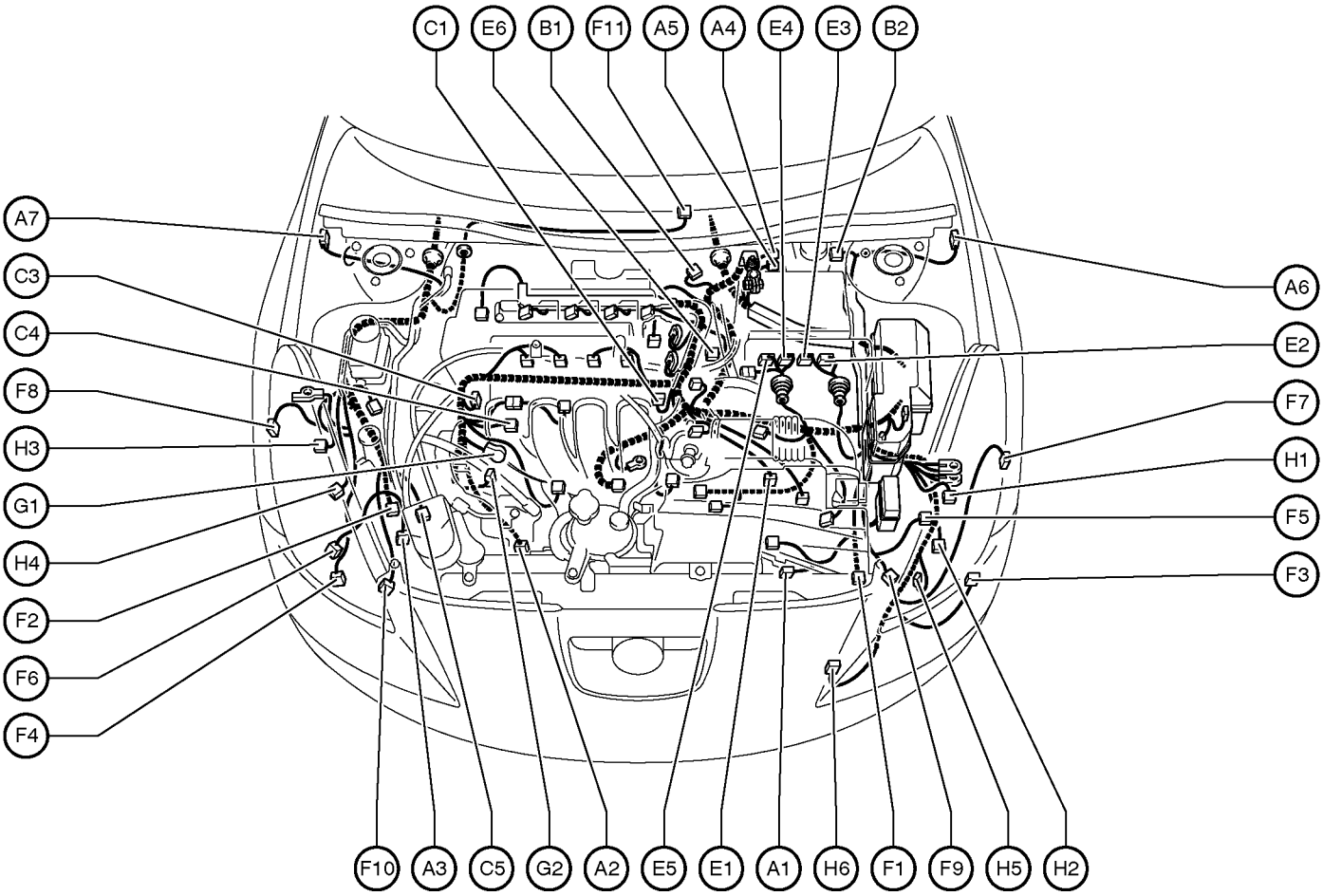

A 1 A/C Condenser Fan Motor
A 2 A/C Magnetic Clutch and Lock Sensor
A 3 A/C Triple Pressure SW
(A/C Dual and Single Pressure SW)
A 4 ABS Actuator
A 5 ABS Actuator
A 6 ABS Speed Sensor Front LH
A 7 ABS Speed Sensor Front RH

B 1 Back–Up Light SW
B 2 Brake Fluid Level Warning SW

C 1 Camshaft Position Sensor
C 3 Camshaft Timing Oil Control Valve (VVT)
C 4 Crankshaft Position Sensor
C 5 Cruise Control Actuator

E 1 Electronically Controlled Transmission Solenoid
E 2 Engine Control Module
E 3 Engine Control Module
E 4 Engine Control Module
E 5 Engine Control Module
E 6 Engine Coolant Temp. Sensor

F 1 Front Airbag Sensor LH
F 2 Front Airbag Sensor RH
F 3 Front Fog Light LH
F 4 Front Fog Light RH
F 5 Front Parking Light LH
F 6 Front Parking Light RH
F 7 Front Side Marker Light LH
F 8 Front Side Marker Light RH
F 9 Front Turn Signal Light LH
F 10 Front Turn Signal Light RH
F 11 Front Wiper Motor

G 1 Generator
G 2 Generator

H 1 Headlight LH (High)
H 2 Headlight LH (Low)
H 3 Headlight RH (High)
H 4 Headlight RH (Low)
H 5 Horn LH
H 6 Horn RH

Position of Parts in Engine Compartment

[1ZZ–FE]

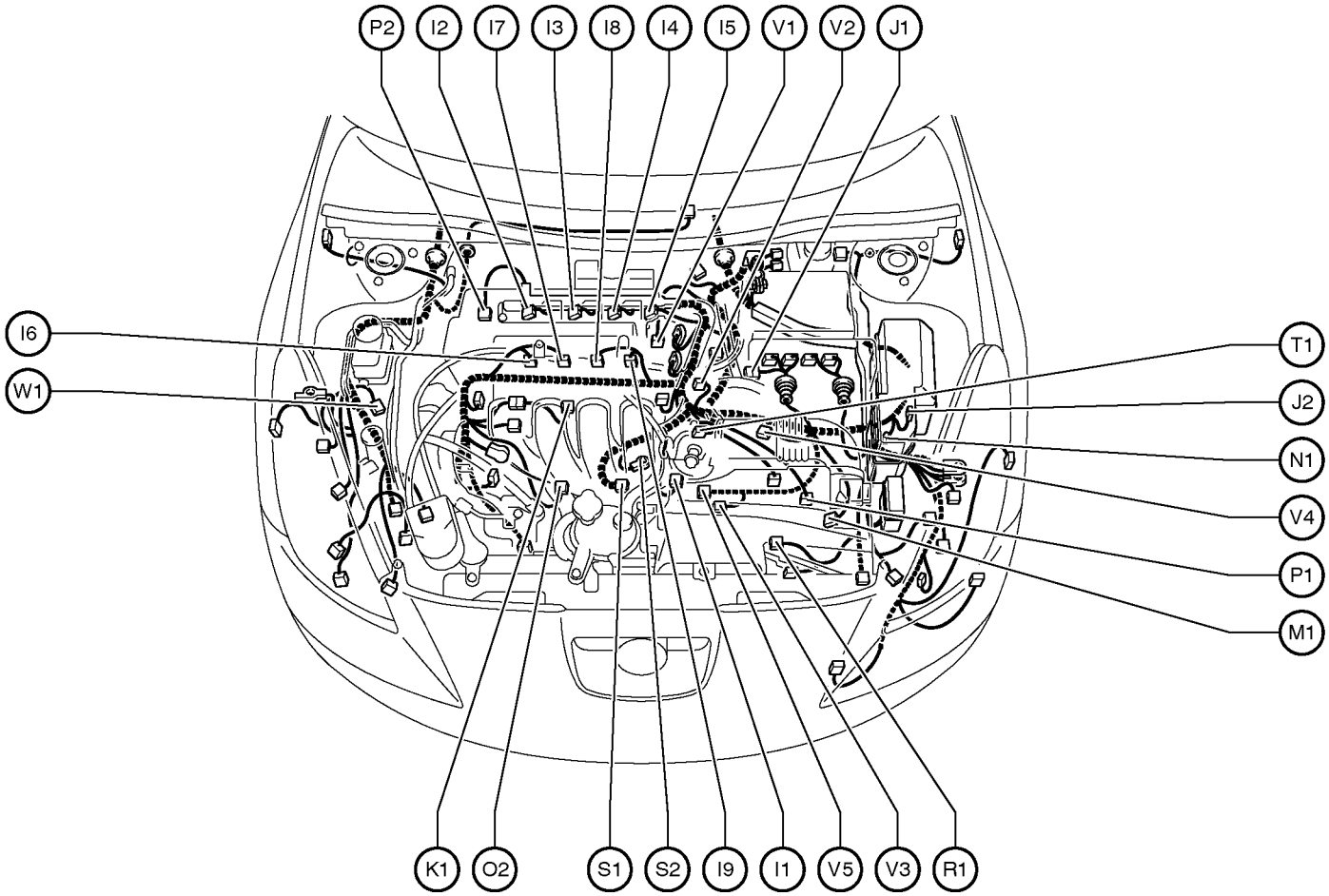

I 1 Idle Air Control Valve
I 2 Ignition Coil and Igniter No.1
I 3 Ignition Coil and Igniter No.2
I 4 Ignition Coil and Igniter No.3
I 5 Ignition Coil and Igniter No.4
I 6 Injector No.1
I 7 Injector No.2
I 8 Injector No.3
I 9 Injector No.4

J 1 Junction Connector
J 2 Junction Connector

K 1 Knock Sensor

M 1 Mass Air Flow Meter

N 1 Noise Filter (Ignition System)

O 2 Oil Pressure SW

P 1 Park/Neutral Position SW
P 2 Power Steering Oil Pressure SW

R 1 Radiator Fan Motor

S 1 Starter
S 2 Starter

T 1 Throttle Position Sensor

V 1 Vehicle Speed Sensor (Combination Meter)
V 2 Vehicle Speed Sensor (Electronically Controlled Transmission)
V 3 VSV (ACIS)
V 4 VSV (Canister Closed Valve)
V 5 VSV (EVAP)

W 1 Washer Motor

Position of Parts in Engine Compartment

[2ZZ–GE]

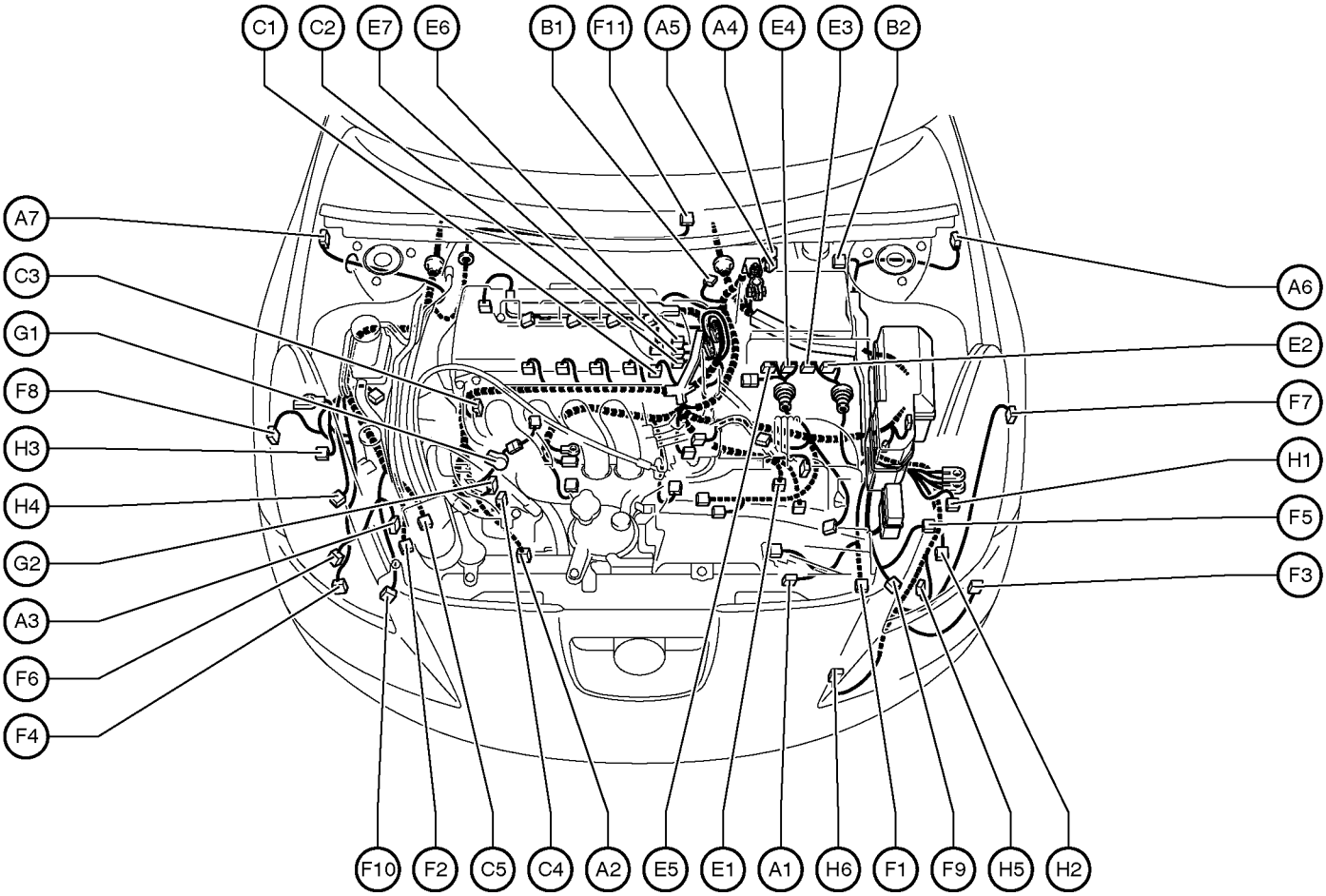

A 1 A/C Condenser Fan Motor
A 2 A/C Magnetic Clutch and Lock Sensor
A 3 A/C Triple Pressure SW
(A/C Dual and Single Pressure SW)
A 4 ABS Actuator
A 5 ABS Actuator
A 6 ABS Speed Sensor Front LH
A 7 ABS Speed Sensor Front RH

B 1 Back–Up Light SW
B 2 Brake Fluid Level Warning SW

C 1 Camshaft Position Sensor
C 2 Camshaft Timing Oil Control Valve (VVL)
C 3 Camshaft Timing Oil Control Valve (VVT)
C 4 Crankshaft Position Sensor
C 5 Cruise Control Actuator

E 1 Electronically Controlled Transmission Solenoid
E 2 Engine Control Module
E 3 Engine Control Module
E 4 Engine Control Module
E 5 Engine Control Module
E 6 Engine Coolant Temp. Sensor
E 7 Engine Oil Level Warning SW

F 1 Front Airbag Sensor LH
F 2 Front Airbag Sensor RH
F 3 Front Fog Light LH
F 4 Front Fog Light RH
F 5 Front Parking Light LH
F 6 Front Parking Light RH
F 7 Front Side Marker Light LH
F 8 Front Side Marker Light RH
F 9 Front Turn Signal Light LH
F 10 Front Turn Signal Light RH
F 11 Front Wiper Motor

G 1 Generator
G 2 Generator

H 1 Headlight LH (High)
H 2 Headlight LH (Low)
H 3 Headlight RH (High)
H 4 Headlight RH (Low)
H 5 Horn (High)
H 6 Horn (Low)

Position of Parts in Engine Compartment

[2ZZ–GE]

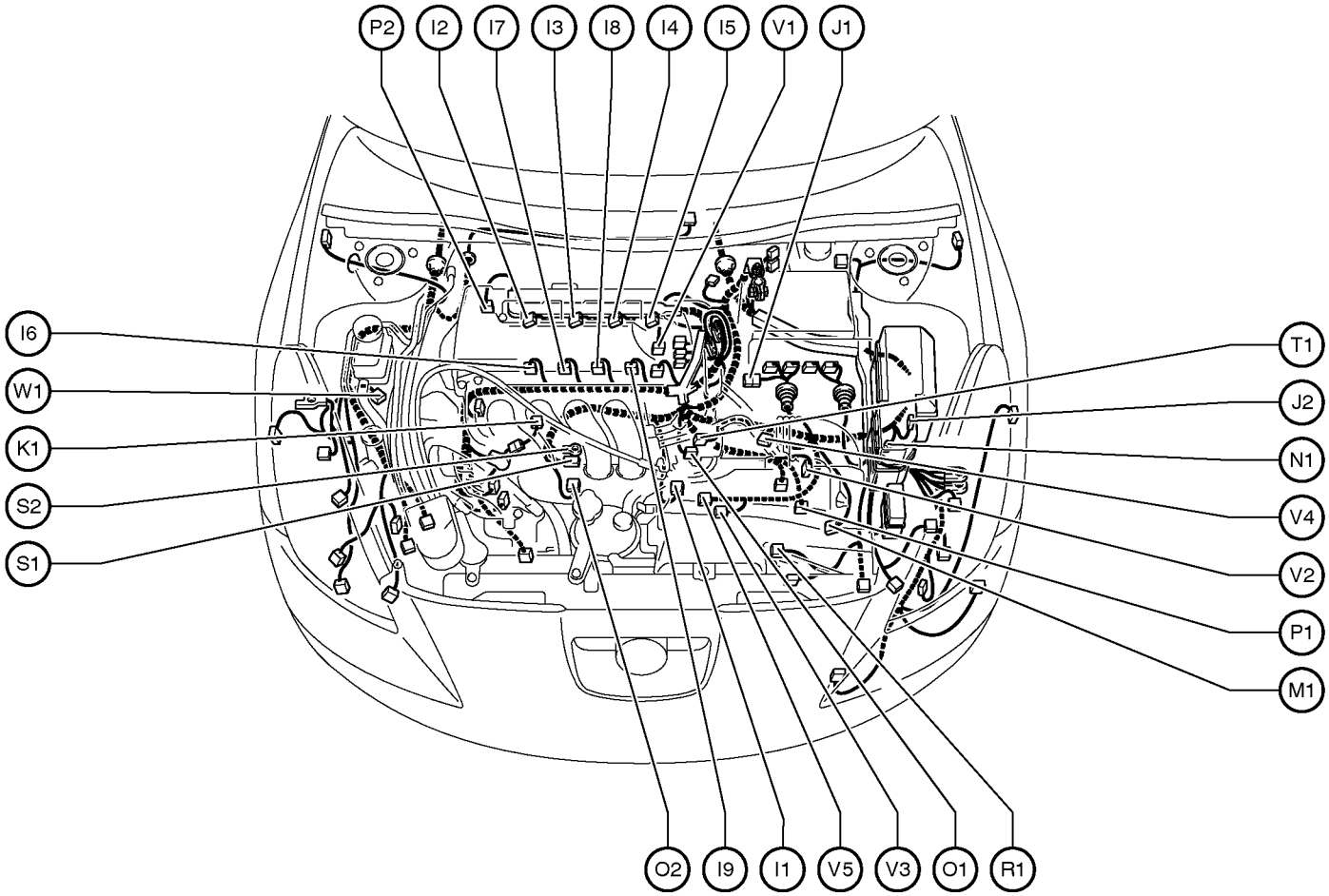

I 1 Idle Air Control Valve
I 2 Ignition Coil and Igniter No.1
I 3 Ignition Coil and Igniter No.2
I 4 Ignition Coil and Igniter No.3
I 5 Ignition Coil and Igniter No.4
I 6 Injector No.1
I 7 Injector No.2
I 8 Injector No.3
I 9 Injector No.4

J 1 Junction Connector
J 2 Junction Connector

K 1 Knock Sensor

M 1 Mass Air Flow Meter

N 1 Noise Filter (Ignition System)

O 1 O/D Direct Clutch Speed Sensor
O 2 Oil Pressure SW

P 1 Park/Neutral Position SW
P 2 Power Steering Oil Pressure SW

R 1 Radiator Fan Motor

S 1 Starter
S 2 Starter

T 1 Throttle Position Sensor

V 1 Vehicle Speed Sensor (Combination Meter)
V 2 Vehicle Speed Sensor (Electronically Controlled Transmission)
V 3 VSV (ACIS)
V 4 VSV (Canister Closed Valve)
V 5 VSV (EVAP)

W 1 Washer Motor

Position of Parts in Instrument Panel

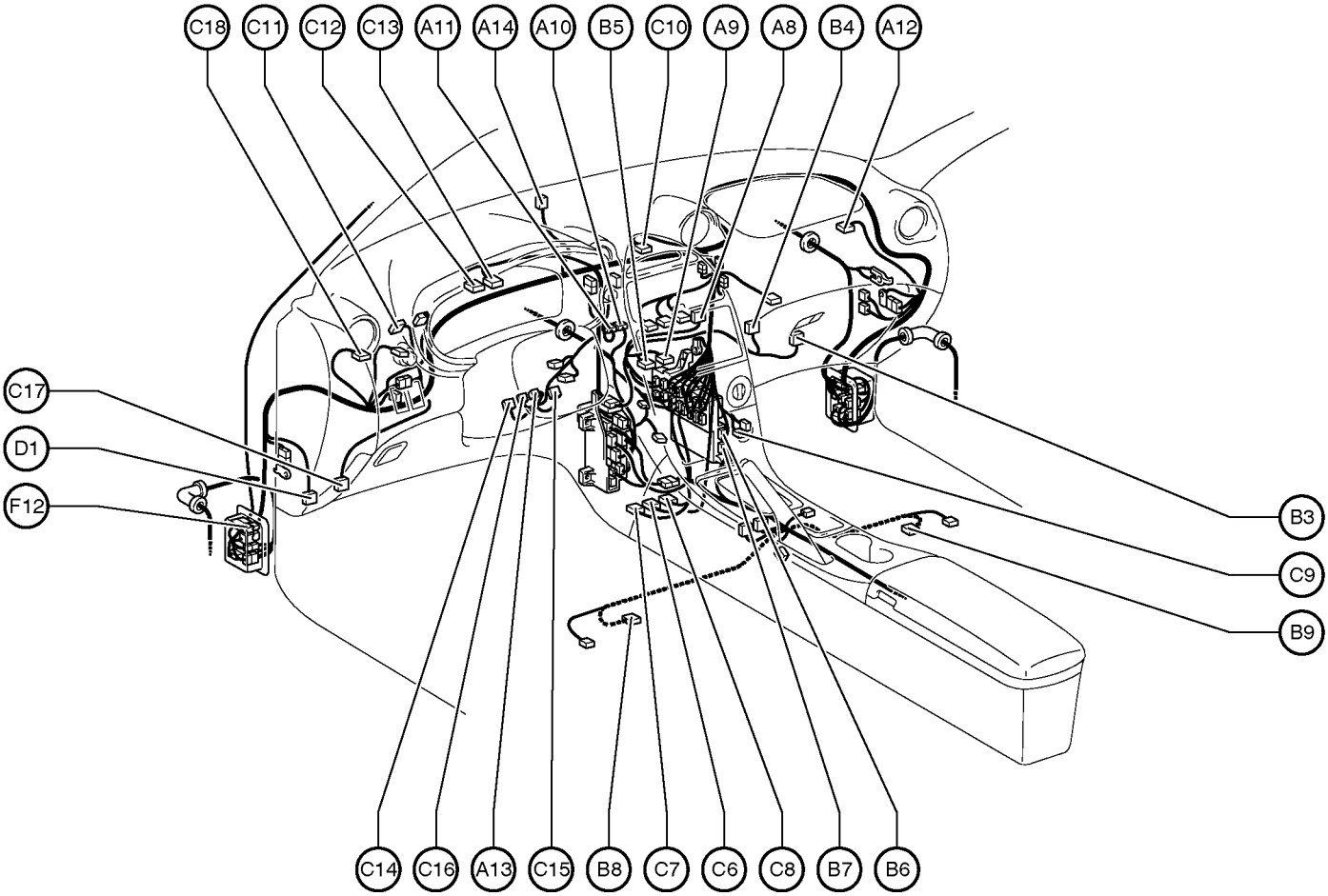

A 8 A/C Evaporator Temp. Sensor
A 9 A/C SW
A 10 ABS ECU
A 11 ABS ECU
A 12 Airbag Squib (Front Passenger Airbag Assembly)
A 13 Airbag Squib (Steering Wheel Pad)
A 14 Automatic Light Control Sensor

B 3 Blower Motor
B 4 Blower Resistor
B 5 Blower SW
B 6 Body ECU
B 7 Body ECU
B 8 Buckle SW LH
B 9 Buckle SW RH

C 6 Center Airbag Sensor Assembly
C 7 Center Airbag Sensor Assembly
C 8 Center Airbag Sensor Assembly
C 9 Cigarette Lighter
C 10 Clock
C 11 Clutch Start SW
C 12 Combination Meter
C 13 Combination Meter
C 14 Combination SW
C 15 Combination SW
C 16 Combination SW
C 17 Cruise Control Clutch SW
C 18 Cruise Control ECU

D 1 Data Link Connector 3

F 12 Front Fog Light Relay

Position of Parts in Instrument Panel

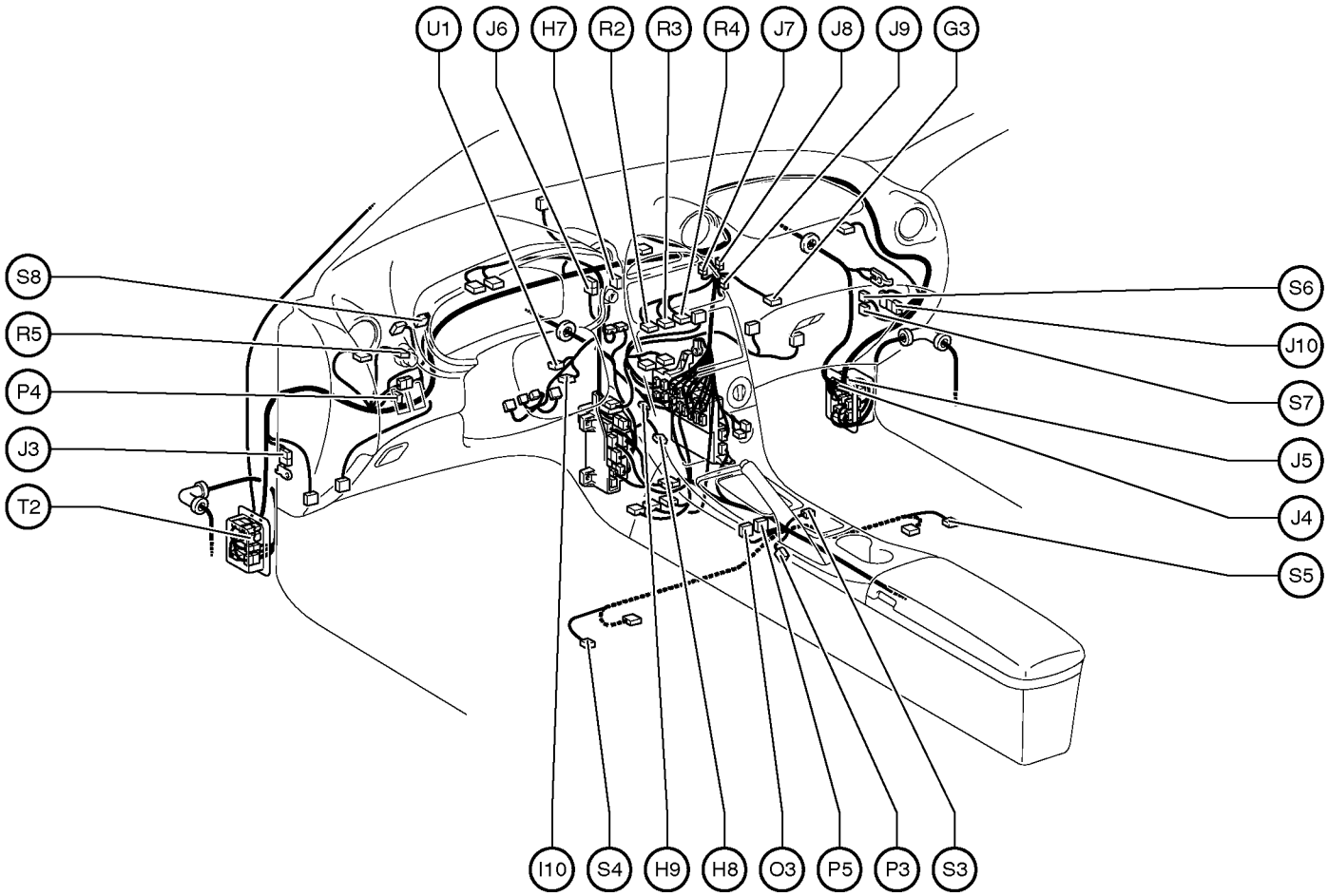

G 3 Glove Box Light and SW

H 7 Hazard SW
H 8 Heated Oxygen Sensor (Bank 1 Sensor 1)
H 9 Heated Oxygen Sensor (Bank 1 Sensor 2)

I 10 Ignition SW

J 3 Junction Connector
J 4 Junction Connector
J 5 Junction Connector
J 6 Junction Connector
J 7 Junction Connector
J 8 Junction Connector
J 9 Junction Connector
J 10 Junction Connector

O 3 O/D Main SW

P 3 Parking Brake SW
P 4 Power Window Lock SW
P 5 Power Window Master SW

R 2 Radio and Player
R 3 Radio and Player
R 4 Radio and Player
R 5 Rheostat

S 3 Shift Lock Control ECU
S 4 Side Airbag Squib LH
S 5 Side Airbag Squib RH
S 6 Stereo Component Amplifier
S 7 Stereo Component Amplifier
S 8 Stop Light SW

T 2 Turn Signal Flasher Relay

U 1 Unlock Warning SW

Position of Parts in Body

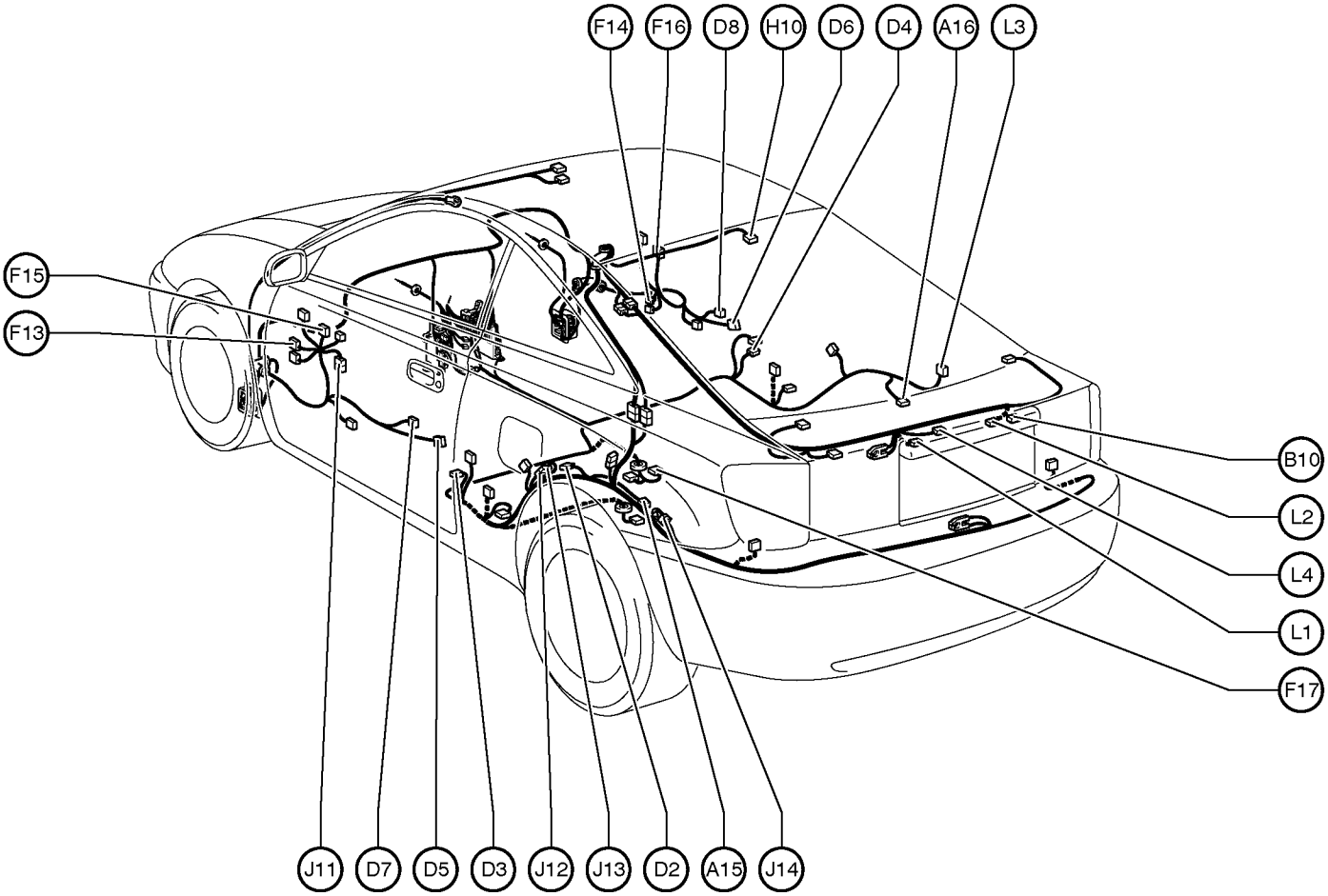

A 15 ABS Speed Sensor Rear LH
A 16 ABS Speed Sensor Rear RH

B 10 Back Door Lock Motor

D 2 Door Control Receiver
D 3 Door Courtesy SW LH
D 4 Door Courtesy SW RH
D 5 Door Lock Motor,Door Lock Detection SW and Door Key Lock and Unlock SW LH
D 6 Door Lock Motor,Door Lock Detection SW and Door Key Lock and Unlock SW RH
D 7 Door Side Airbag Sensor LH
D 8 Door Side Airbag Sensor RH

F 13 Front Door Speaker LH
F 14 Front Door Speaker RH
F 15 Front Door Tweeter Speaker LH
F 16 Front Door Tweeter Speaker RH
F 17 Fuel Sender and Pump

H 10 High Mounted Stop Light

J 11 Junction Connector
J 12 Junction Connector
J 13 Junction Connector
J 14 Junction Connector

L 1 License Plate Light LH
L 2 License Plate Light RH
L 3 Luggage Compartment Light
L 4 Luggage Compartment Light SW

Position of Parts in Body

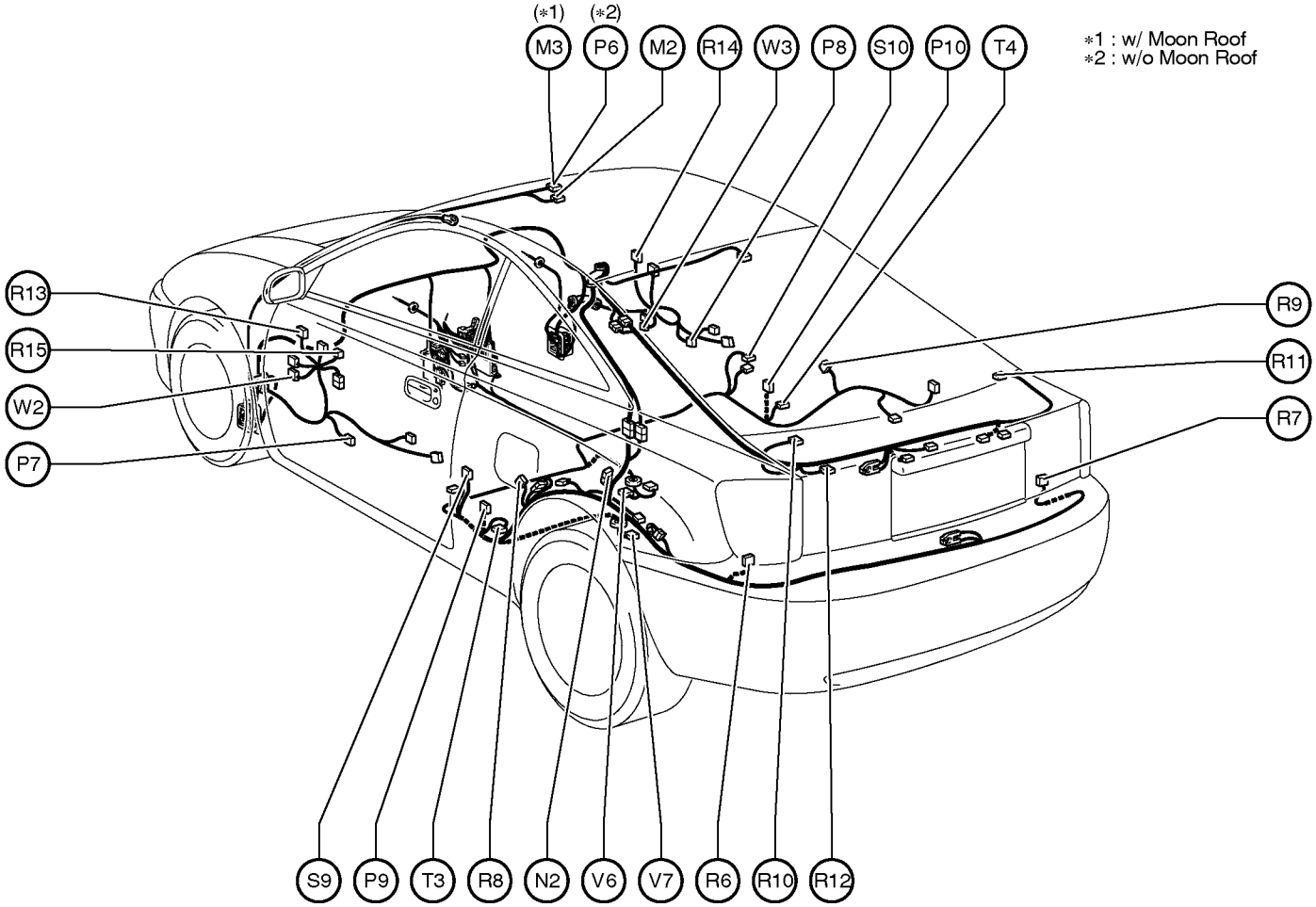

M 2 Moon Roof Control Relay and Motor
M 3 Moon Roof Control SW and Personal Light

N 2 Noise Filter (Rear Window Defogger)

P 6 Personal Light (w/o Moon Roof)
P 7 Power Window Motor LH
P 8 Power Window Motor RH
P 9 Pretensioner LH
P10 Pretensioner RH

R 6 Rear Combination Light LH
R 7 Rear Combination Light RH
R 8 Rear Speaker LH
R 9 Rear Speaker RH
R10 Rear Window Defogger
R11 Rear Window Defogger
R12 Rear Wiper Motor and Relay
R13 Remote Control Mirror LH
R14 Remote Control Mirror RH
R15 Remote Control Mirror SW

S 9 Side Airbag Sensor LH
S10 Side Airbag Sensor RH

T 3 Tension Reducer Solenoid LH
T 4 Tension Reducer Solenoid RH

V 6 Vapor Pressure Sensor
V 7 VSV (Pressure Switching Valve)

W 2 Woofer Speaker LH
W 3 Woofer Speaker RH

▭ : Location of Connector Joining Wire Harness and Wire Harness

▽ : Location of Ground Points

[1ZZ–FE]

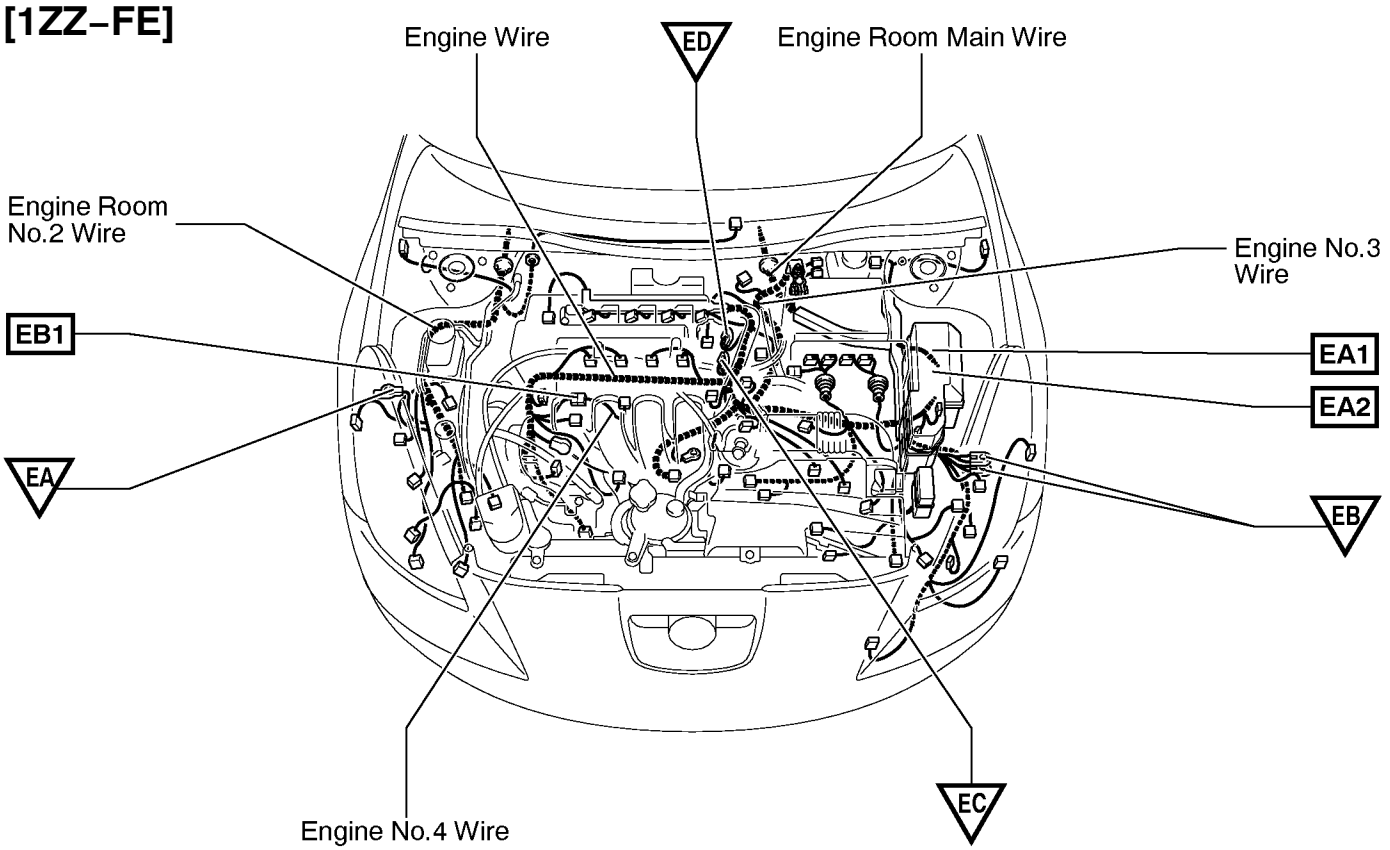

○ : Location of Splice Points

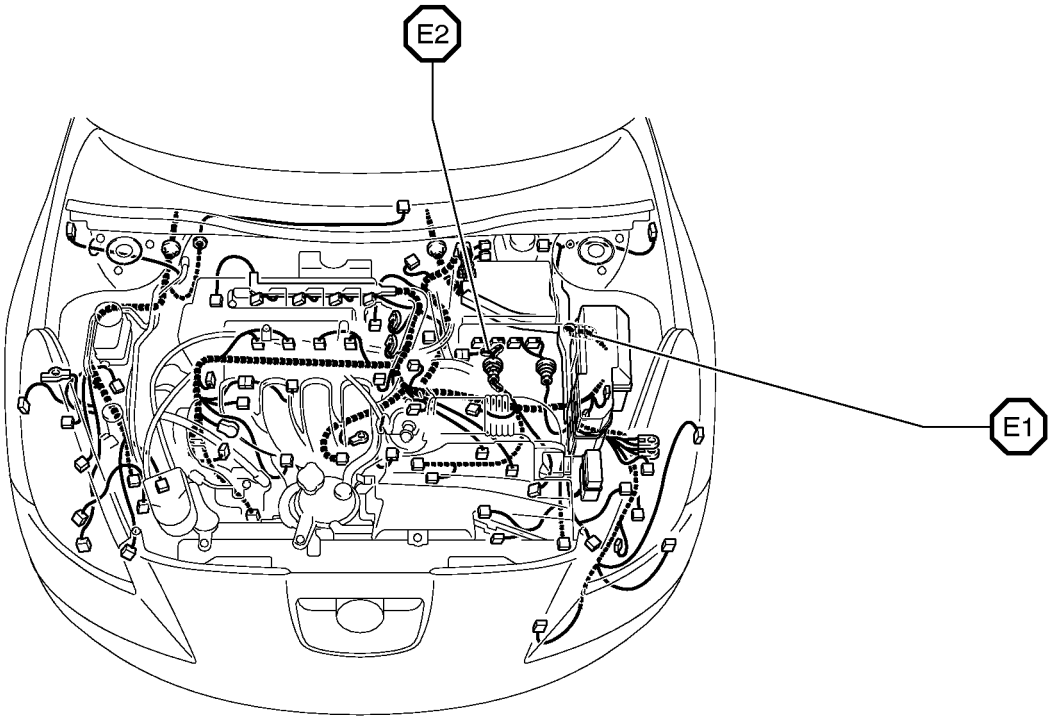

Connector Joining Wire Harness and Wire Harness

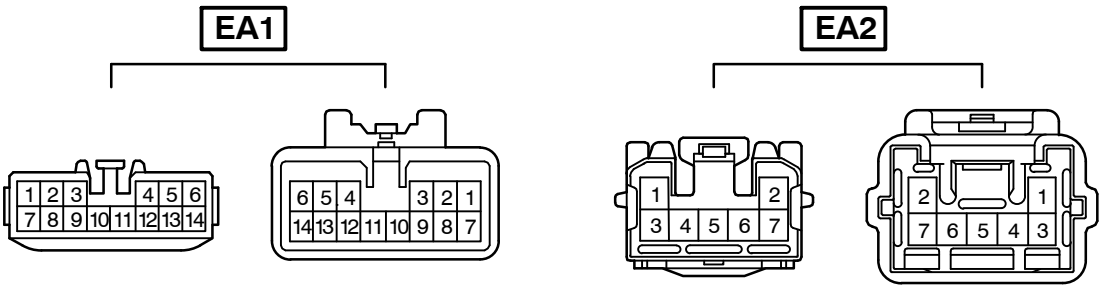

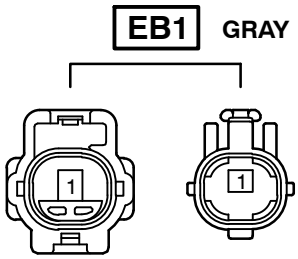

Code	Joining Wire Harness and Wire Harness (Connector Location)
EA1	Engine Wire and Engine Room Main Wire (Inside of Engine Room R/B No.1)
EA2	
EB1	Engine No.4 Wire and Engine Wire (Under the Intake Manifold)

▭ : Location of Connector Joining Wire Harness and Wire Harness

▽ : Location of Ground Points

[2ZZ–GE]

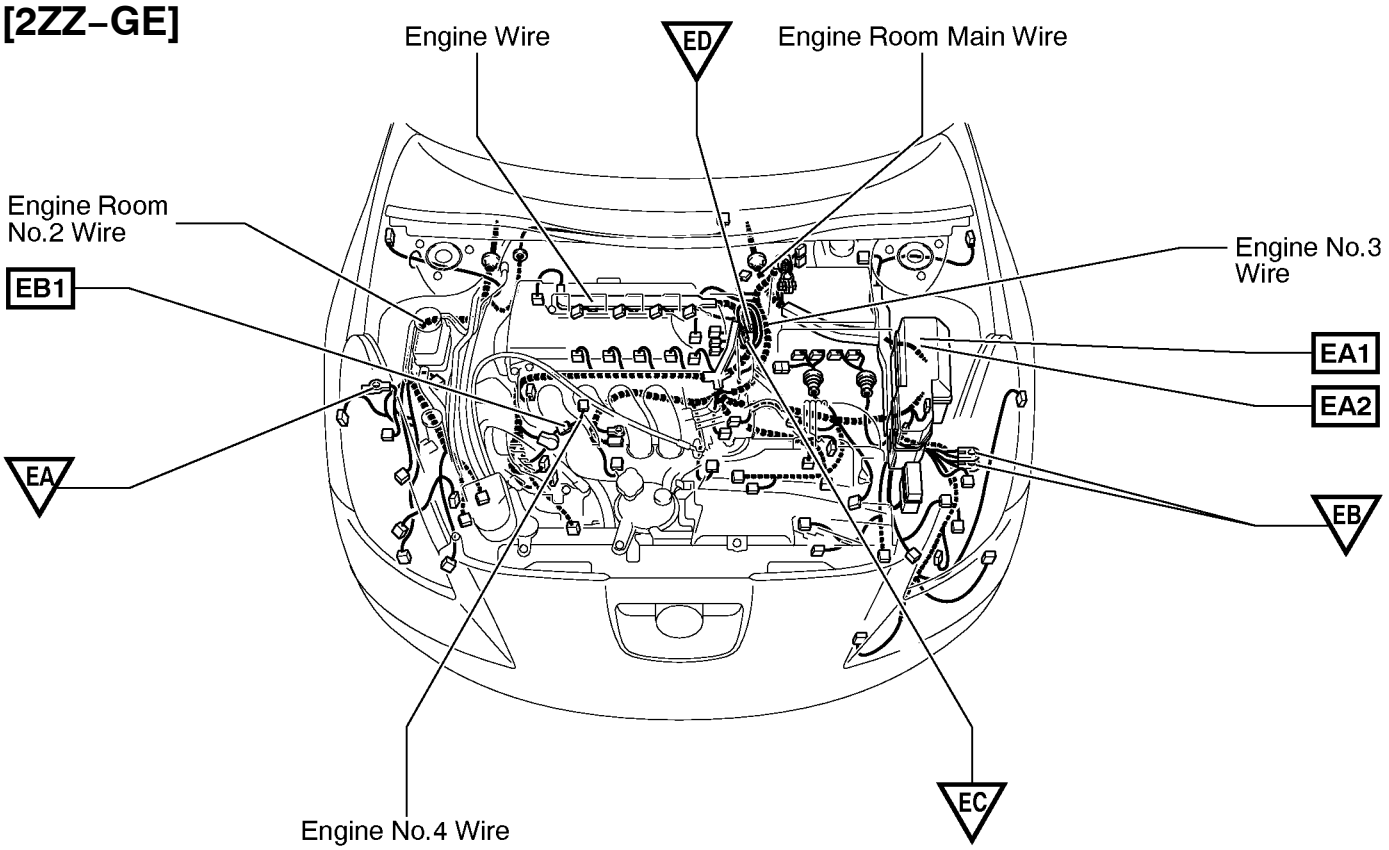

○ : Location of Splice Points

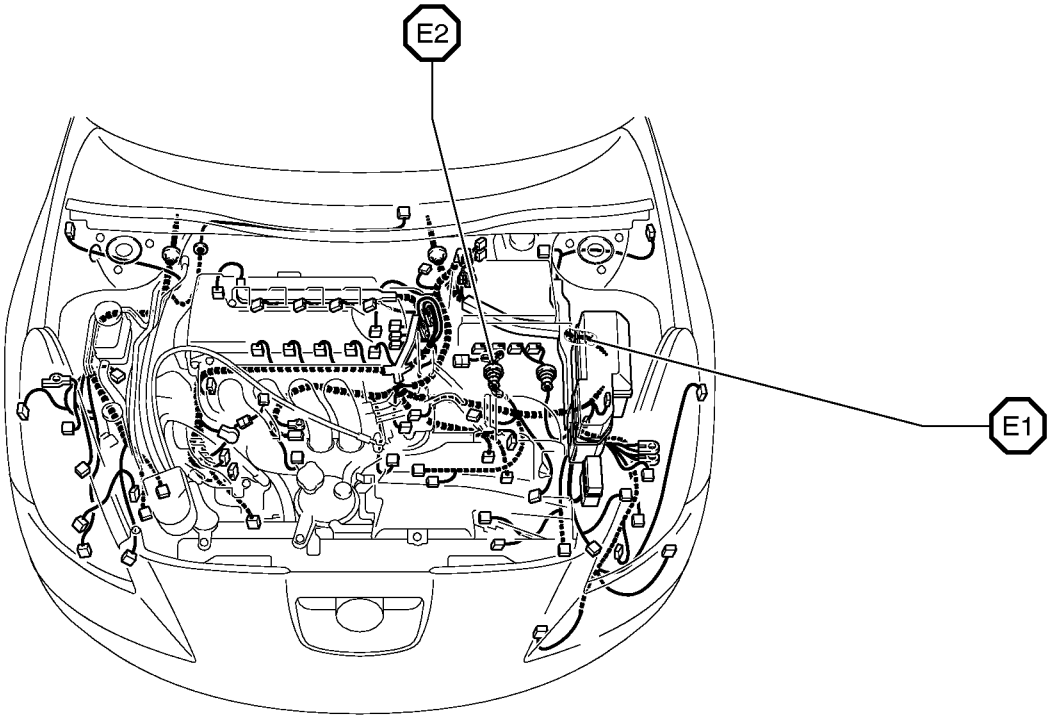

Connector Joining Wire Harness and Wire Harness

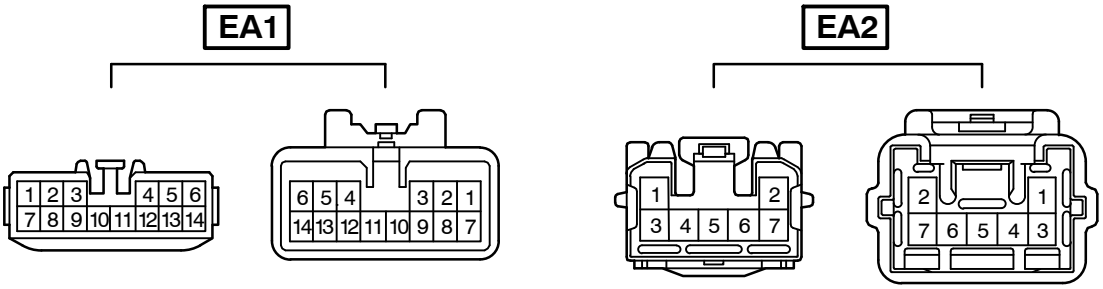

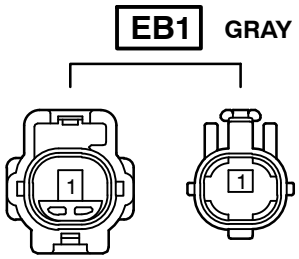

Code	Joining Wire Harness and Wire Harness (Connector Location)
EA1	Engine Wire and Engine Room Main Wire (Inside of Engine Room R/B No.1)
EA2	
EB1	Engine No.4 Wire and Engine Wire (Under the Intake Manifold)

▭ : Location of Connector Joining Wire Harness and Wire Harness

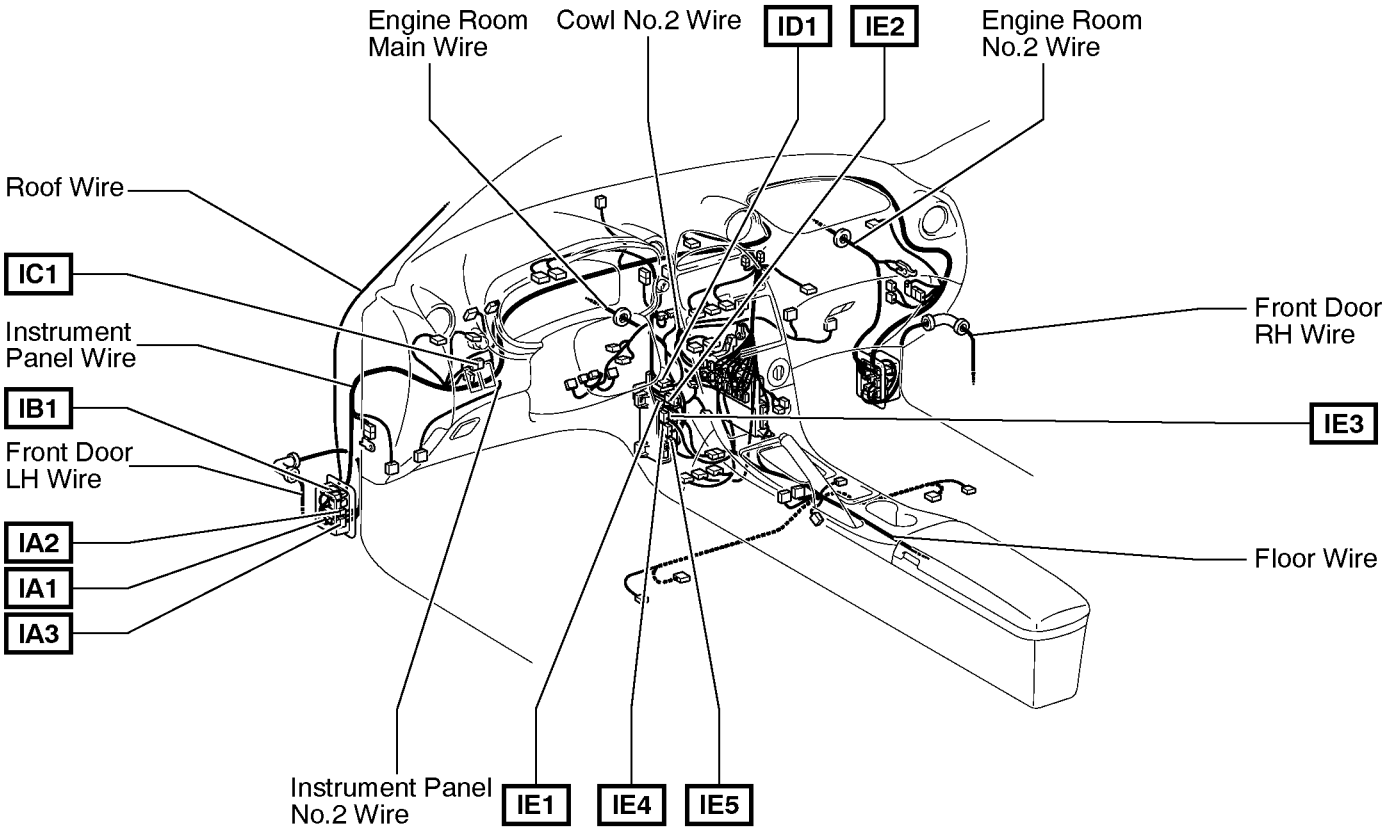

▽ : Location of Ground Points

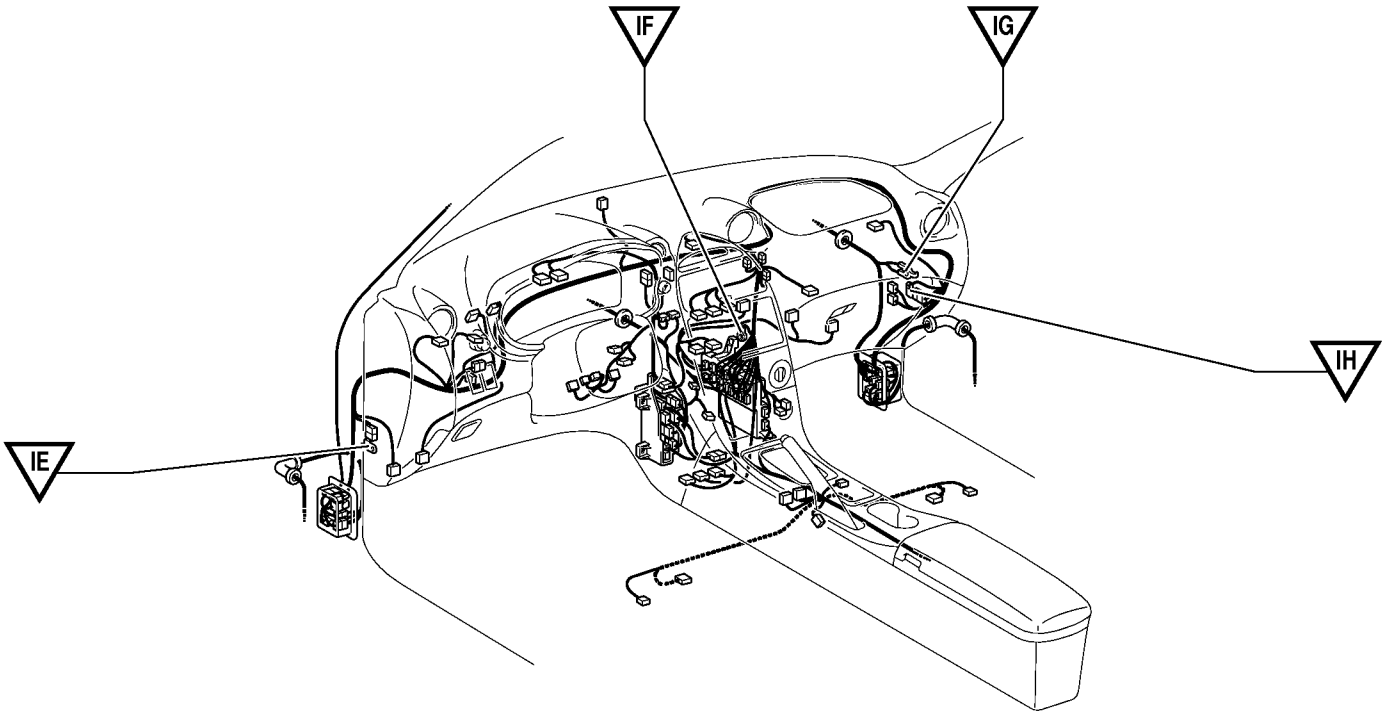

Connector Joining Wire Harness and Wire Harness

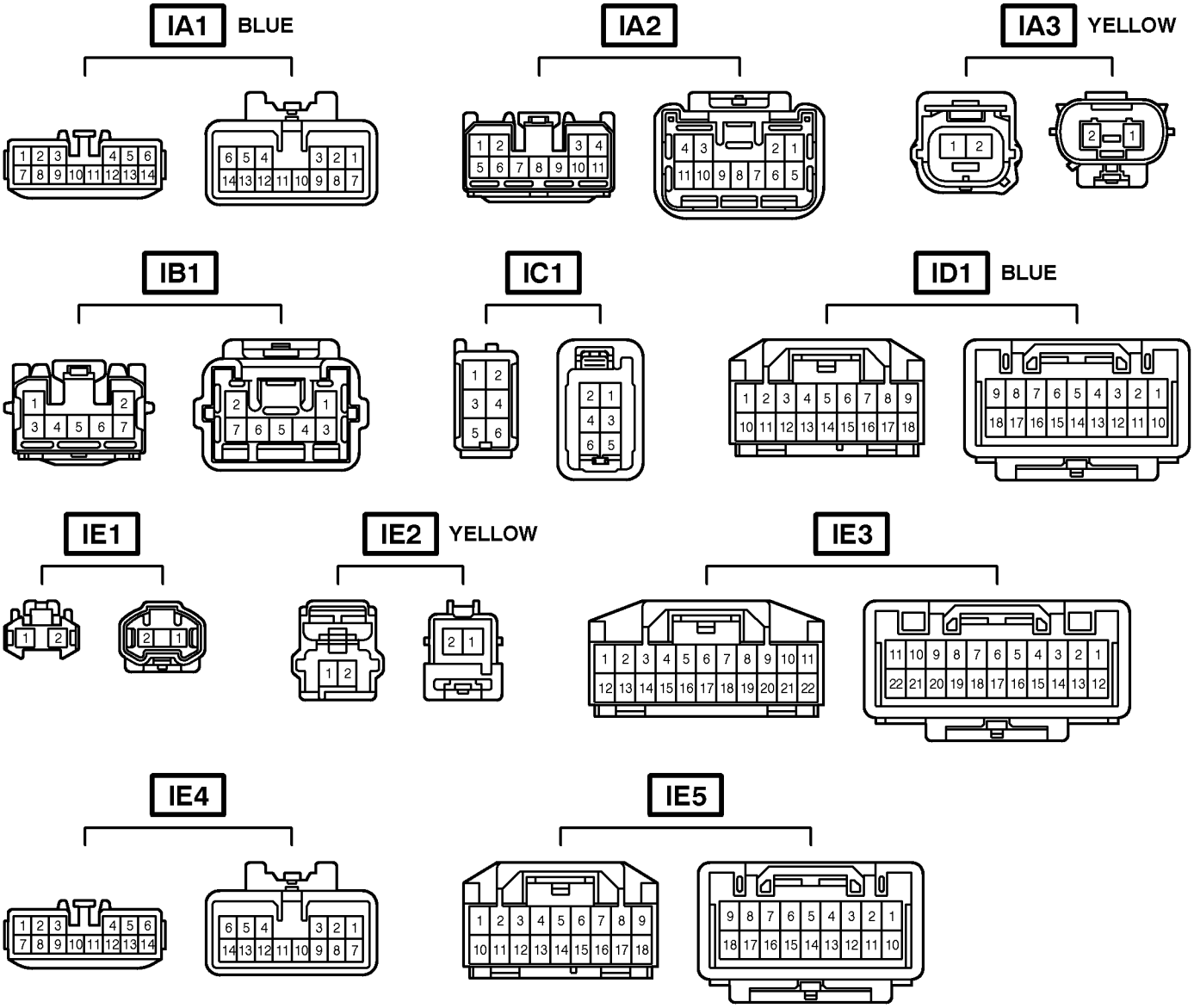

Code	Joining Wire Harness and Wire Harness (Connector Location)
IA1	Front Door LH Wire and Instrument Panel Wire (Left Kick Panel)
IA2	
IA3	
IB1	Roof Wire and Instrument Panel Wire (Left Kick Panel)
IC1	Instrument Panel Wire and Instrument Panel No.2 Wire (Instrument Panel Reinforcement LH)
ID1	Cowl No.2 Wire and Instrument Panel Wire (Instrument Panel Brace LH)
IE1	Engine Room Main Wire and Instrument Panel Wire (Instrument Panel Brace LH)
IE2	
IE3	
IE4	
IE5	

▭ : Location of Connector Joining Wire Harness and Wire Harness

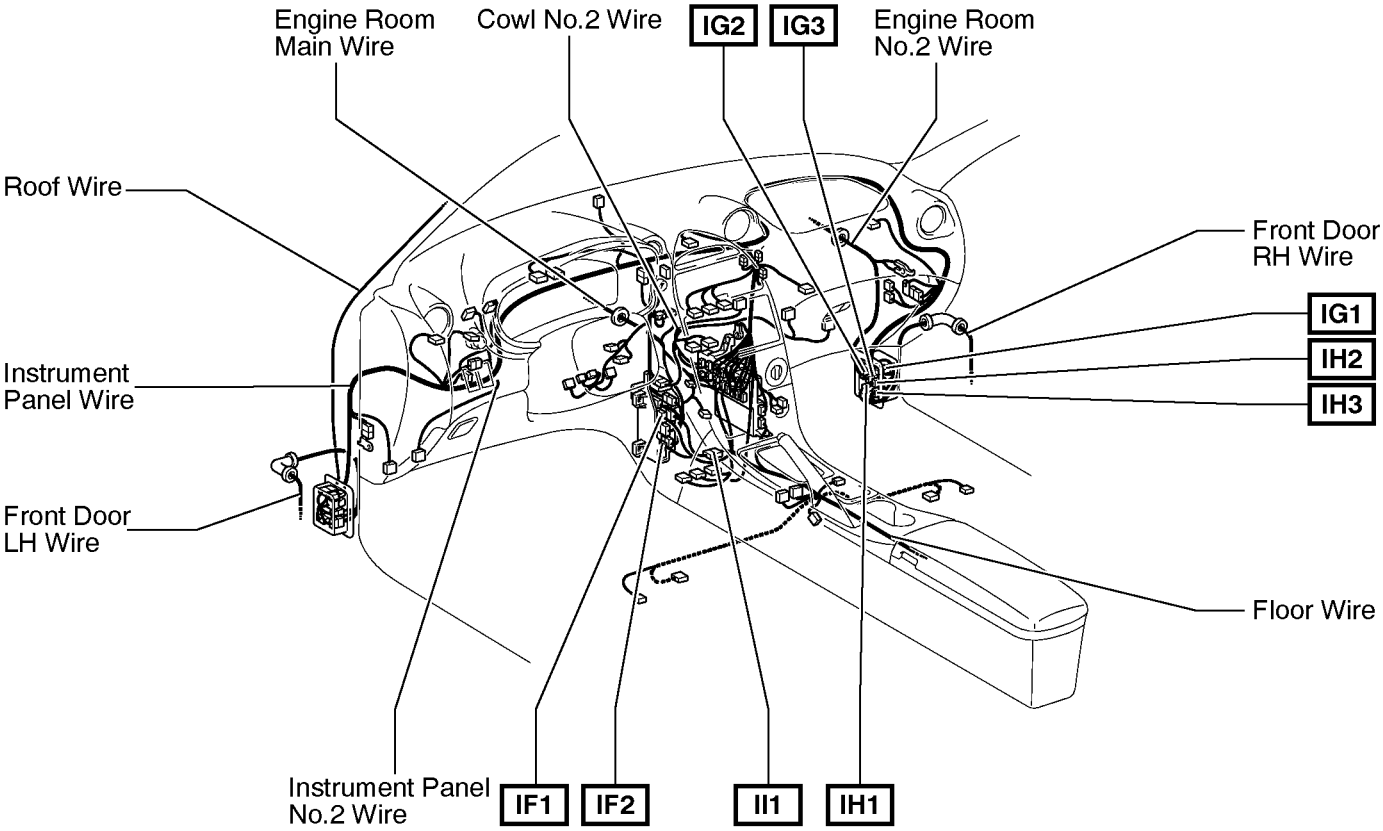

⬡ : Location of Splice Points

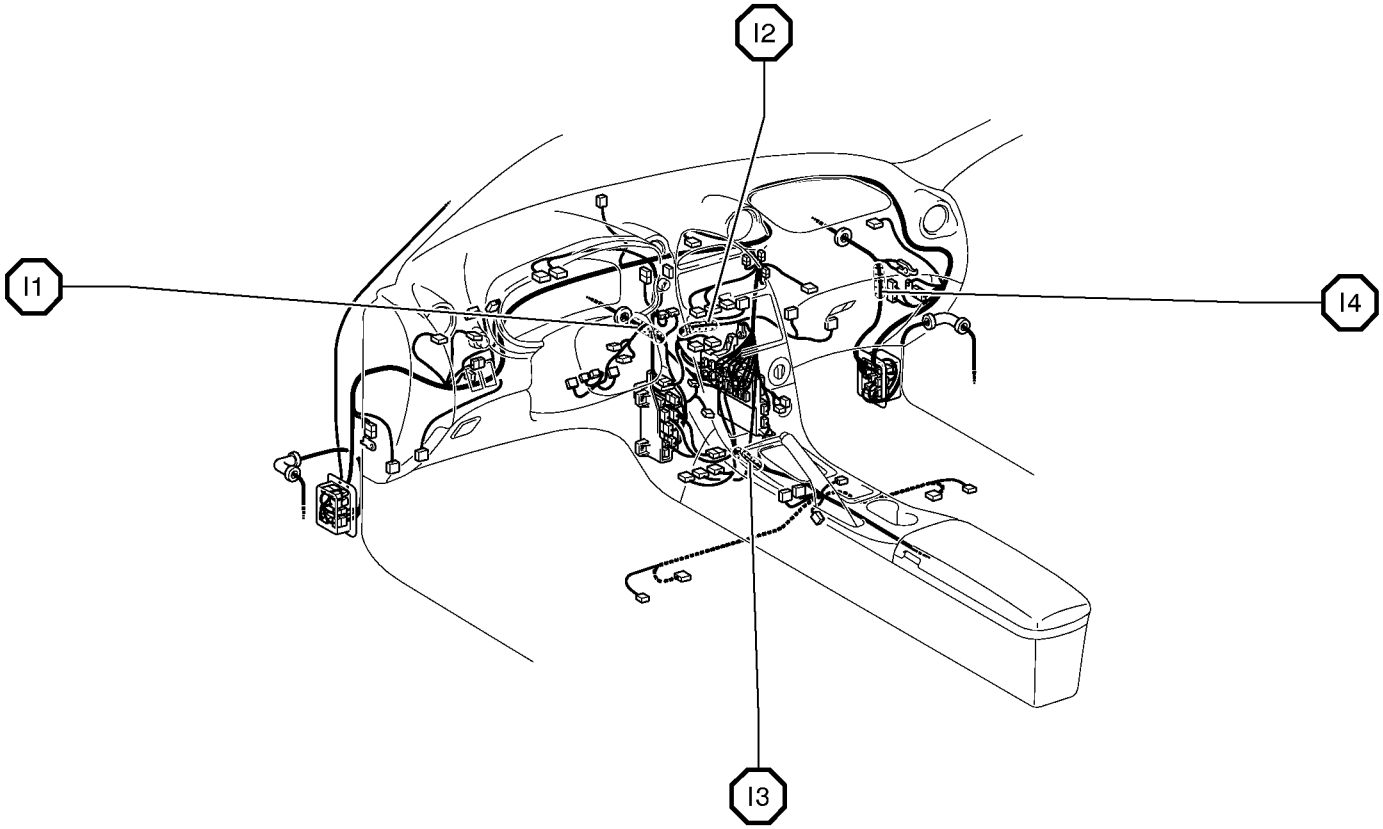

Connector Joining Wire Harness and Wire Harness

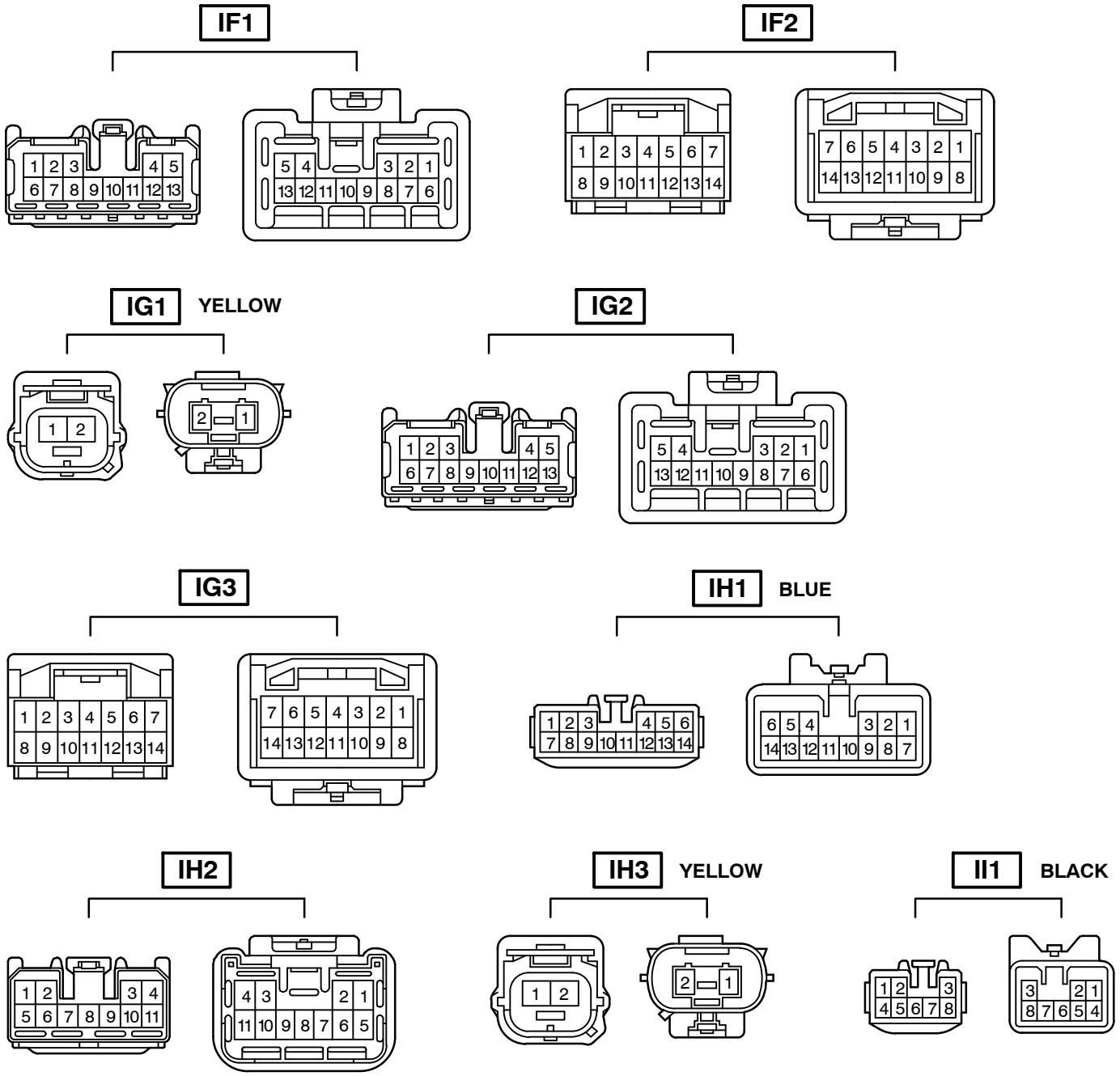

Code	Joining Wire Harness and Wire Harness (Connector Location)
IF1	Floor Wire and Instrument panel Wire (Instrument Panel Brace LH)
IF2	
IG1	Engine Room No.2 Wire and Instrument Panel Wire (Right Kick Panel)
IG2	
IG3	
IH1	Front Door RH Wire and Instrument Panel Wire (Right Kick Panel)
IH2	
IH3	
II1	Engine Room Main Wire and Floor Wire (Instrument Panel Brace LH)

G ELECTRICAL WIRING ROUTING

▭ : Location of Connector Joining Wire Harness and Wire Harness
▽ : Location of Ground Points

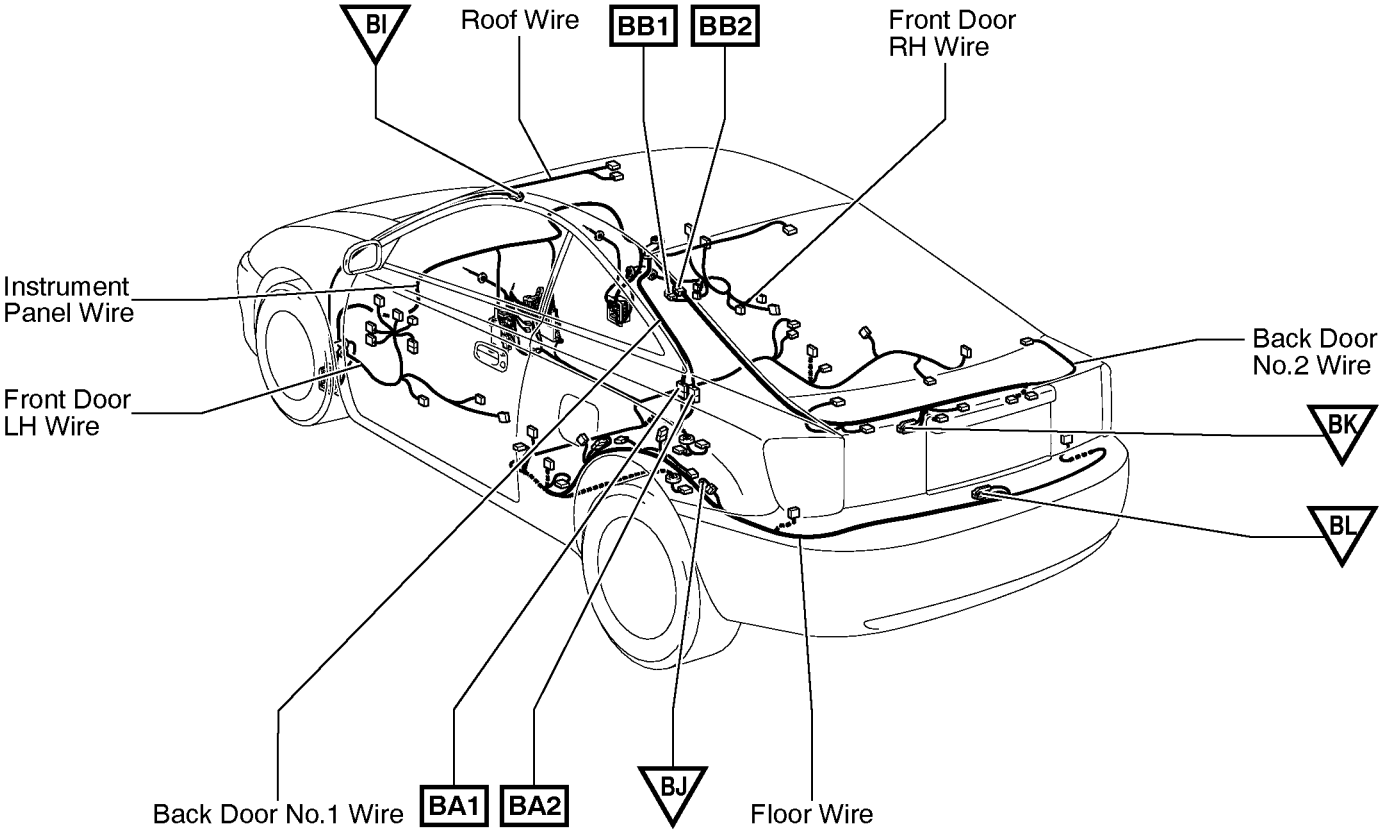

⬡ : Location of Splice Points

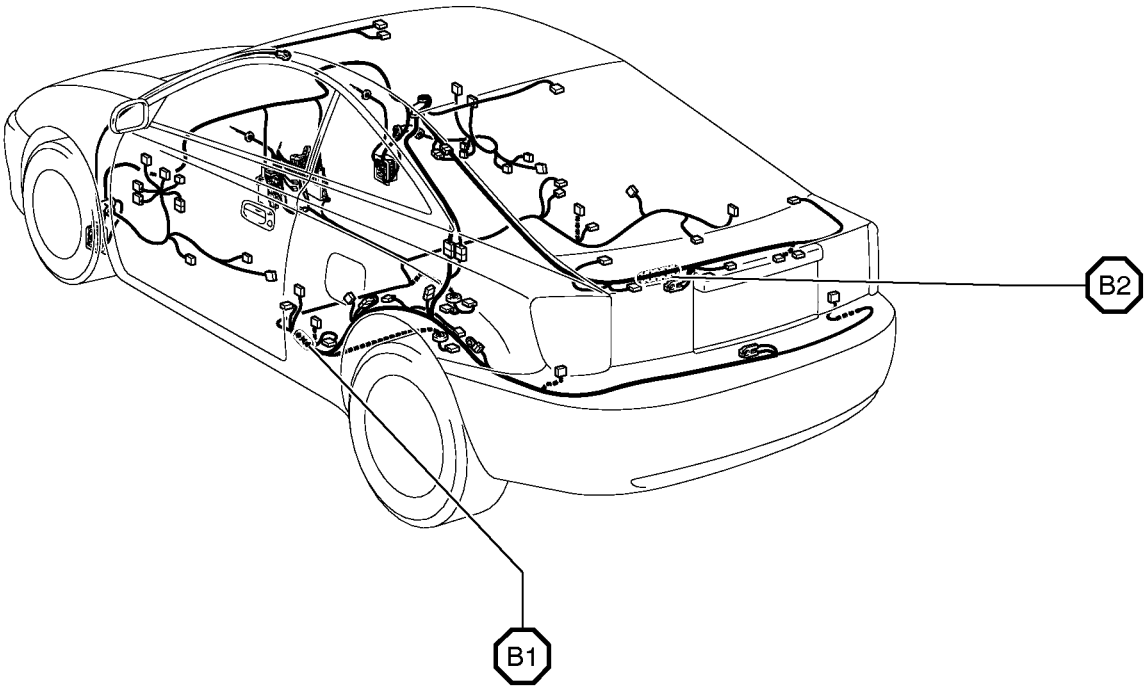

Connector Joining Wire Harness and Wire Harness

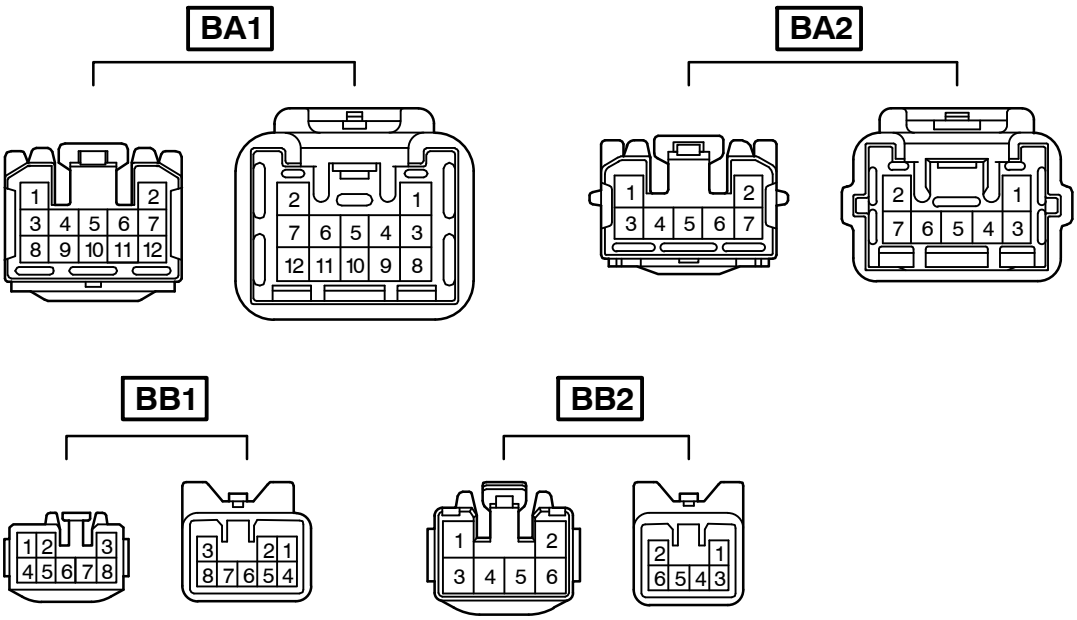

Code	Joining Wire Harness and Wire Harness (Connector Location)
BA1	Back Door No.1 Wire and Floor Wire (Quarter Panel LH)
BA2	
BB1	Back Door No.2 Wire and Back Door No.1 Wire (Back Door Upper Left)
BB2	

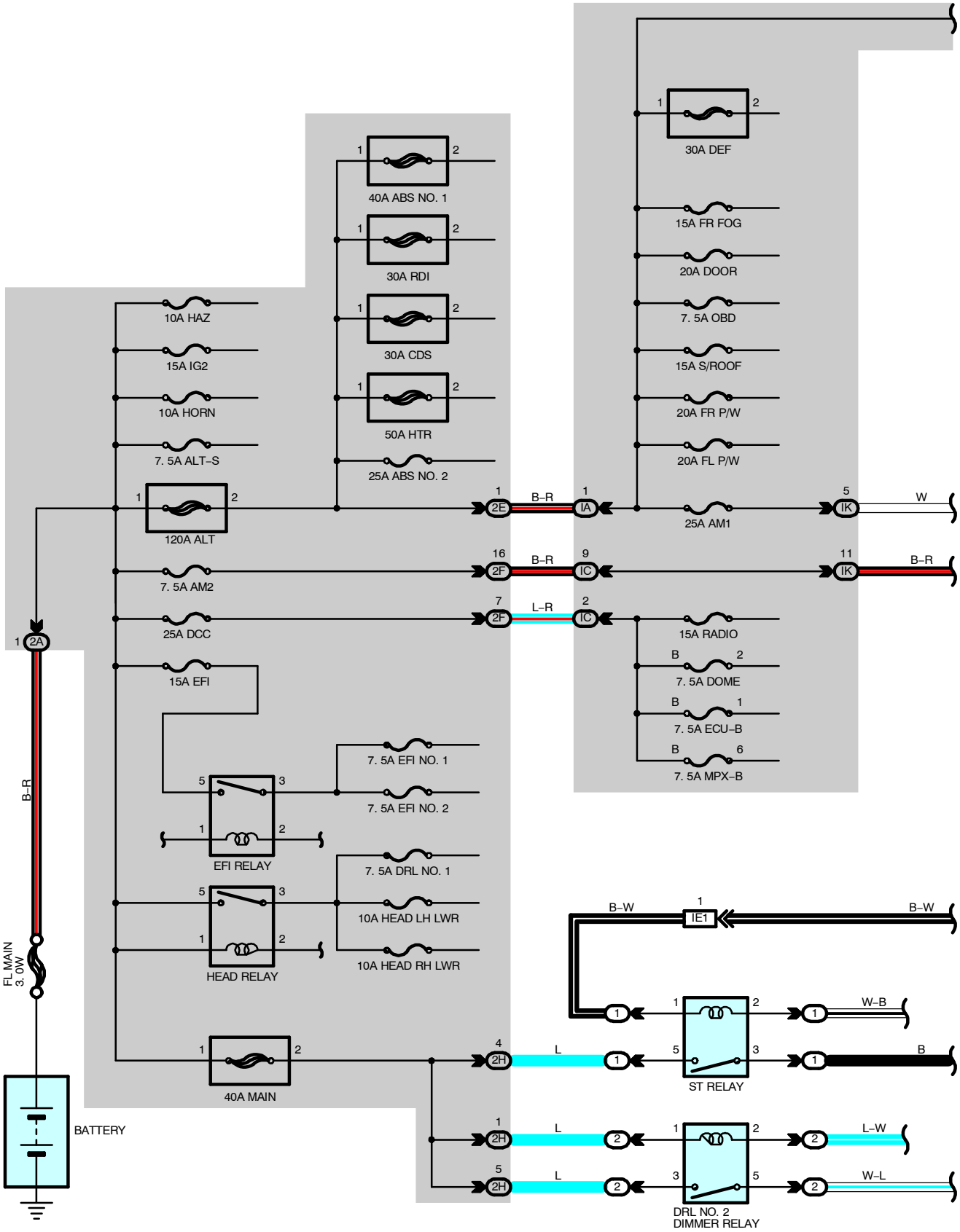
40A ABS NO. 1
30A RDI
30A CDS
50A HTR
25A ABS NO. 2
10A HAZ
15A IG2
10A HORN
7. 5A ALT–S
120A ALT
7. 5A AM2
25A DCC
15A EFI
EFI RELAY
HEAD RELAY
40A MAIN
7. 5A EFI NO. 1
7. 5A EFI NO. 2
7. 5A DRL NO. 1
10A HEAD LH LWR
10A HEAD RH LWR
30A DEF
15A FR FOG
20A DOOR
7. 5A OBD
15A S/ROOF
20A FR P/W
20A FL P/W
25A AM1
15A RADIO
7. 5A DOME
7. 5A ECU–B
7. 5A MPX–B
B–R
L–R
W
B–W
W–B
L
B
L–W
W–L
ST RELAY
DRL NO. 2
DIMMER RELAY
FL MAIN
3. 0W
BATTERY

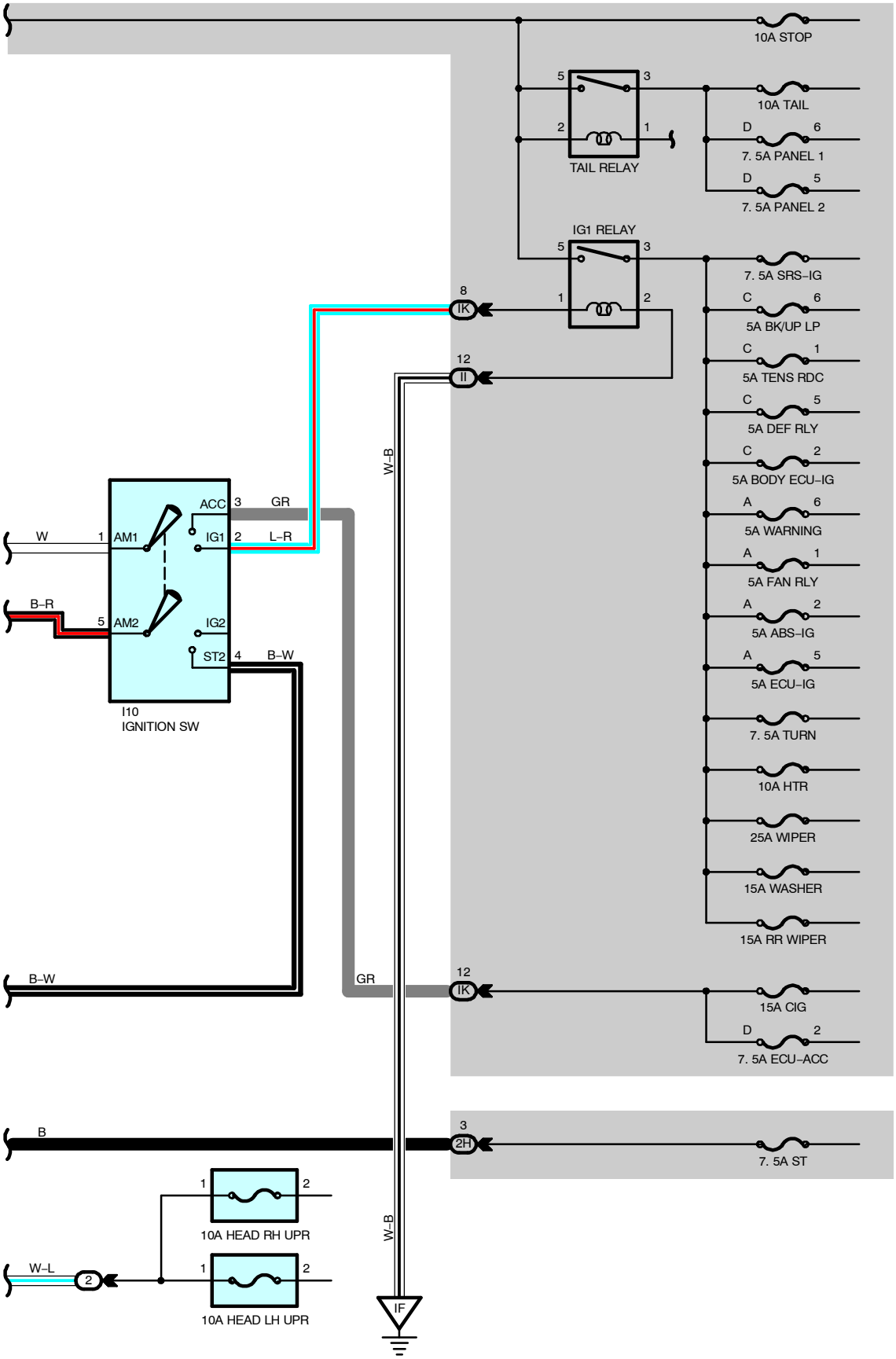
10A STOP
10A TAIL
TAIL RELAY
7. 5A PANEL 1
7. 5A PANEL 2
IG1 RELAY
7. 5A SRS-IG
5A BK/UP LP
5A TENS RDC
5A DEF RLY
5A BODY ECU-IG
5A WARNING
5A FAN RLY
5A ABS-IG
5A ECU-IG
7. 5A TURN
10A HTR
25A WIPER
15A WASHER
15A RR WIPER
15A CIG
7. 5A ECU-ACC
7. 5A ST
10A HEAD RH UPR
10A HEAD LH UPR
I10
IGNITION SW
ACC
IG1
AM1
AM2
IG2
ST2
W
B-R
B-W
GR
L-R
W-L
B
W-B
IK
II
2H
IF

SERVICE HINTS

HEAD RELAY

5–3 : Closed with the light control SW at **HEAD** position or the dimmer SW at **FLASH** position
Closed with the engine running and the parking brake lever released (Parking brake SW off)

TAIL RELAY

5–3 : Closed with the light control SW at **TAIL** or **HEAD** position

I10 IGNITION SW

1–3 : Closed with the ignition key at **ACC** or **ON** position
1–2 : Closed with the ignition key at **ON** or **ST** position
5–4 : Closed with the ignition key at **ST** position

: PARTS LOCATION

Code	See Page	Code	See Page	Code	See Page
I10	37				

: RELAY BLOCKS

Code	See Page	Relay Blocks (Relay Block Location)
1	26	Engine Room R/B No.1 (Engine Compartment Left)
2	27	Engine Room R/B No.2 (Engine Compartment Left)

: JUNCTION BLOCK AND WIRE HARNESS CONNECTOR

Code	See Page	Junction Block and Wire Harness (Connector Location)
IA	25	Engine Room Main Wire and Instrument Panel J/B (Instrument Panel Brace RH)
IC		
II	25	Instrument Panel Wire and Instrument Panel J/B (Instrument Panel Brace RH)
IK		
2A	23	Engine Wire and Engine Room J/B (Engine Compartment Left)
2E	23	Engine Room Main Wire and Engine Room J/B (Engine Compartment Left)
2F		
2H		

: CONNECTOR JOINING WIRE HARNESS AND WIRE HARNESS

Code	See Page	Joining Wire Harness and Wire Harness (Connector Location)
IE1	44	Engine Room Main Wire and Instrument Panel Wire (Instrument Panel Brace LH)

: GROUND POINTS

Code	See Page	Ground Points Location
IF	44	Instrument Panel Brace RH

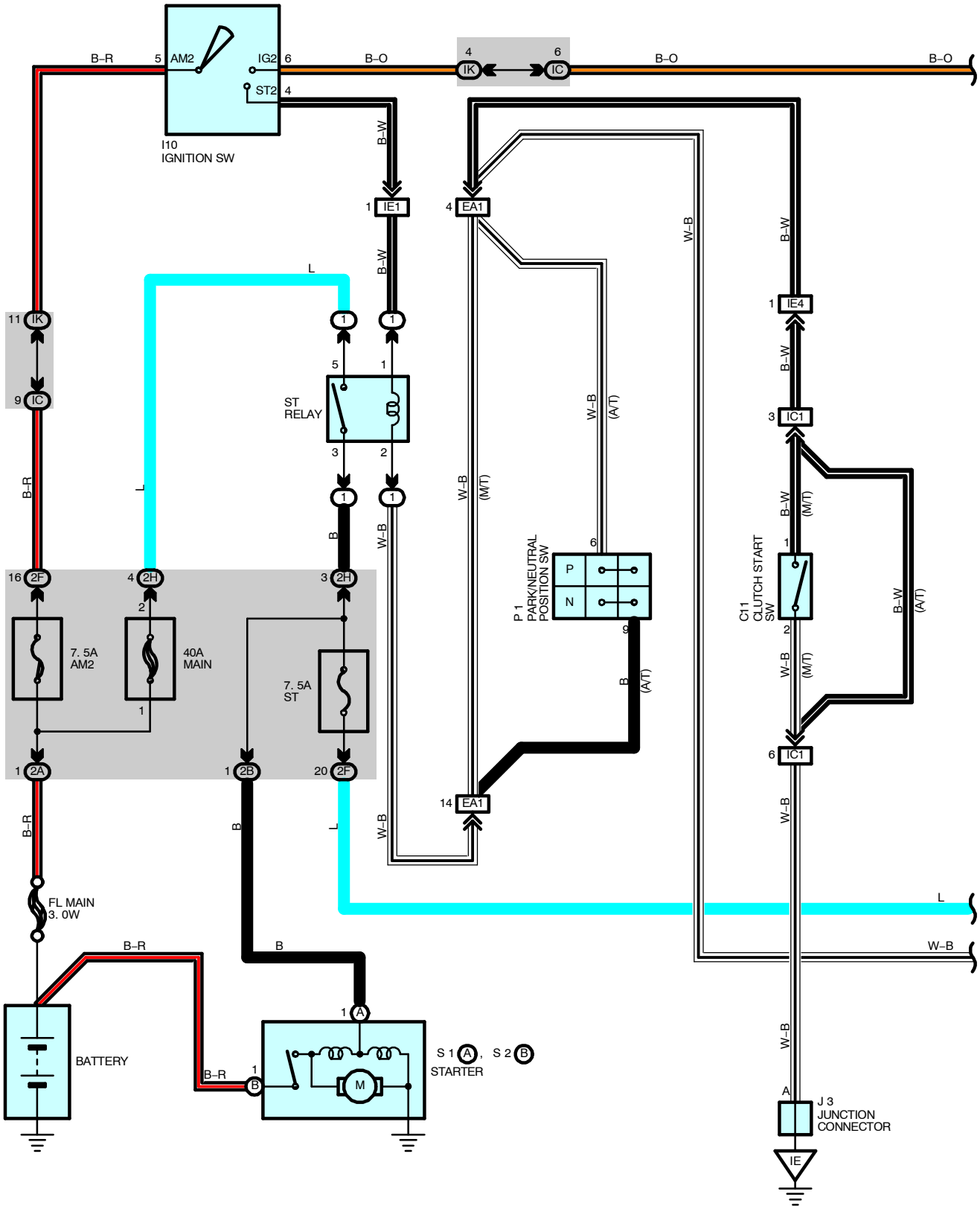
I10
IGNITION SW
AM2
IG2
ST2
B–R
B–O
B–W
IK
IC
IE1
EA1
IE4
IC1
ST
RELAY
W–B
(M/T)
(A/T)
P 1
PARK/NEUTRAL
POSITION SW
P
N
C11
CLUTCH START
SW
7. 5A
AM2
40A
MAIN
7. 5A
ST
2A
2B
2F
2H
FL MAIN
3. 0W
BATTERY
S 1 A, S 2 B
STARTER
M
J 3
JUNCTION
CONNECTOR
IE
L
B

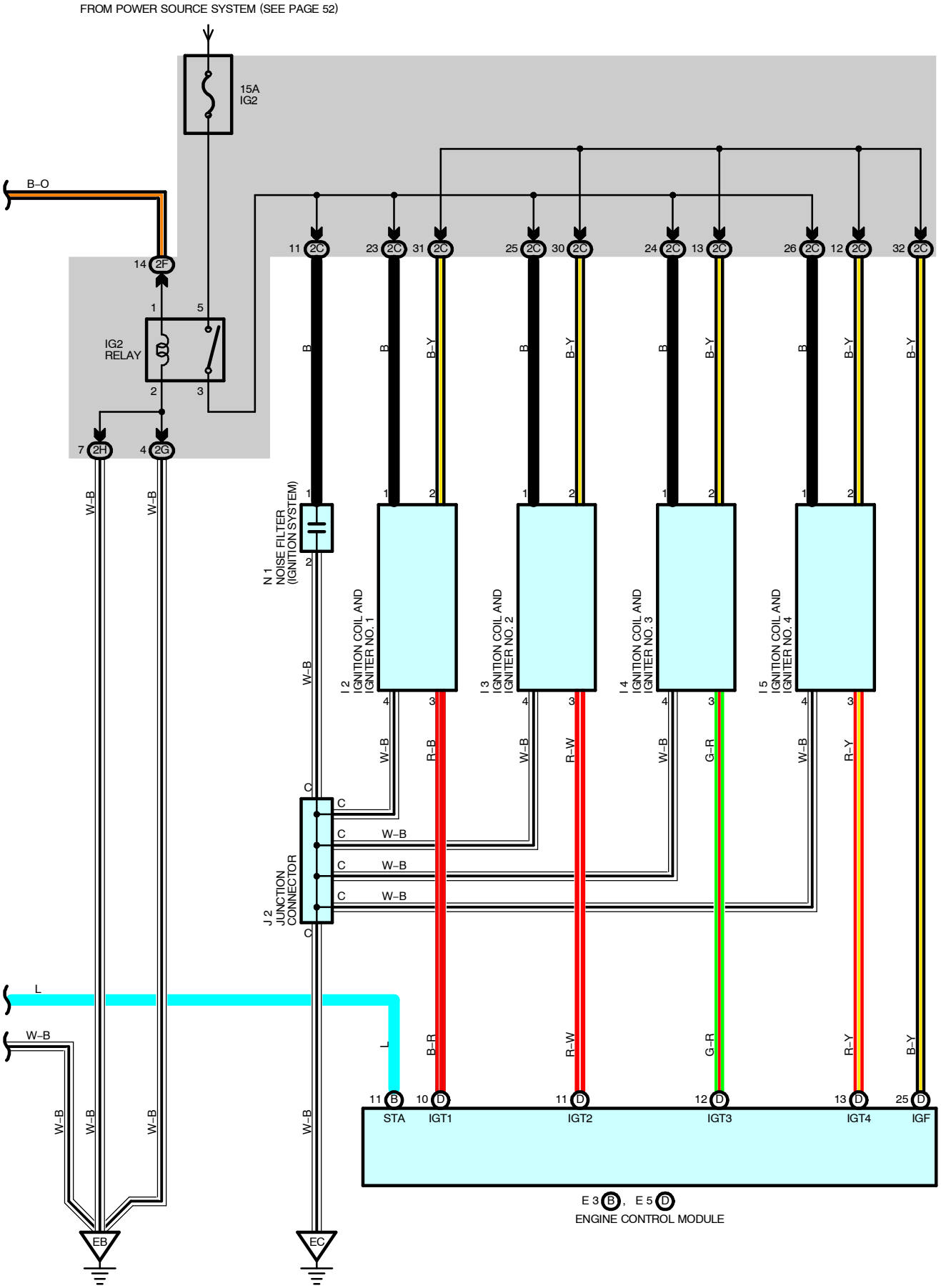
FROM POWER SOURCE SYSTEM (SEE PAGE 52)
15A
IG2
B–O
14 2F
1
5
IG2
RELAY
2
3
7 2H
4 2G
W–B
W–B
11 2C
23 2C
31 2C
25 2C
30 2C
24 2C
13 2C
26 2C
12 2C
32 2C
B
B
B–Y
B
B–Y
B
B–Y
B
B–Y
B–Y
N 1
NOISE FILTER
(IGNITION SYSTEM)
I 2
IGNITION COIL AND
IGNITER NO. 1
I 3
IGNITION COIL AND
IGNITER NO. 2
I 4
IGNITION COIL AND
IGNITER NO. 3
I 5
IGNITION COIL AND
IGNITER NO. 4
W–B
R–B
R–W
G–R
R–Y
J 2
JUNCTION
CONNECTOR
C
W–B
L
W–B
L
B–R
R–W
G–R
R–Y
B–Y
11 B
STA
10 D
IGT1
11 D
IGT2
12 D
IGT3
13 D
IGT4
25 D
IGF
E 3 B , E 5 D
ENGINE CONTROL MODULE
EB
EC

SERVICE HINTS

I10 IGNITION SW

5–6 : Closed with the ignition SW at **ON** or **ST** position
5–4 : Closed with the ignition SW at **ST** position

C11 CLUTCH START SW (M/T)

1–2 : Closed with the clutch pedal fully depressed

ST RELAY

5–3 : Closed with the clutch start SW on (M/T), Park/Neutral position SW on (A/T) and the ignition SW at **ST** position

S1 (A), S2 (B) STARTER

Points closed with the clutch start SW on and the ignition SW at **ST** position (M/T)
Points closed with the Park/Neutral position SW at **P** or **N** position and the ignition SW at **ST** position (A/T)

P1 PARK/NEUTRAL POSITION SW (A/T)

6–9 : Closed with the A/T shift lever at **P** or **N** position

: PARTS LOCATION

Code		See Page	Code	See Page	Code		See Page
C11		36	I4	33 (1ZZ–FE)	N1		35 (2ZZ–GE)
E3	B	32 (1ZZ–FE)		35 (2ZZ–GE)	P1		33 (1ZZ–FE)
		34 (2ZZ–GE)	I5	33 (1ZZ–FE)			35 (2ZZ–GE)
E5	D	32 (1ZZ–FE)		35 (2ZZ–GE)	S1	A	33 (1ZZ–FE)
		34 (2ZZ–GE)	I10	37			35 (2ZZ–GE)
I2		33 (1ZZ–FE)	J2	33 (1ZZ–FE)	S2	B	33 (1ZZ–FE)
		35 (2ZZ–GE)		35 (2ZZ–GE)			35 (2ZZ–GE)
I3		33 (1ZZ–FE)	J3	37			
		35 (2ZZ–GE)	N1	33 (1ZZ–FE)			

: RELAY BLOCKS

Code	See Page	Relay Blocks (Relay Block Location)
1	26	Engine Room R/B No.1 (Engine Compartment Left)

: JUNCTION BLOCK AND WIRE HARNESS CONNECTOR

Code	See Page	Junction Block and Wire Harness (Connector Location)
IC	25	Engine Room Main Wire and Instrument Panel J/B (Instrument Panel Brace RH)
IK	25	Instrument Panel Wire and Instrument Panel J/B (Instrument Panel Brace RH)
2A	23	Engine Wire and Engine Room J/B (Engine Compartment Left)
2B		
2C		
2F	23	Engine Room Main Wire and Engine Room J/B (Engine Compartment Left)
2G		
2H		

: CONNECTOR JOINING WIRE HARNESS AND WIRE HARNESS

Code	See Page	Joining Wire Harness and Wire Harness (Connector Location)
EA1	40 (1ZZ–FE)	Engine Wire and Engine Room Main Wire (Inside of Engine Room R/B No.1)
	42 (2ZZ–GE)	
IC1	44	Instrument Panel Wire and Instrument Panel No.2 Wire (Instrument Panel Reinforcement LH)
IE1	44	Engine Room Main Wire and Instrument Panel Wire (Instrument Panel Brace LH)
IE4		

▽ : GROUND POINTS

Code	See Page	Ground Points Location
EB	40 (1ZZ–FE)	Front Left Fender
	42 (2ZZ–GE)	
EC	40 (1ZZ–FE)	Cylinder Head Cover LH
	42 (2ZZ–GE)	
IE	44	Cowl Side Panel LH

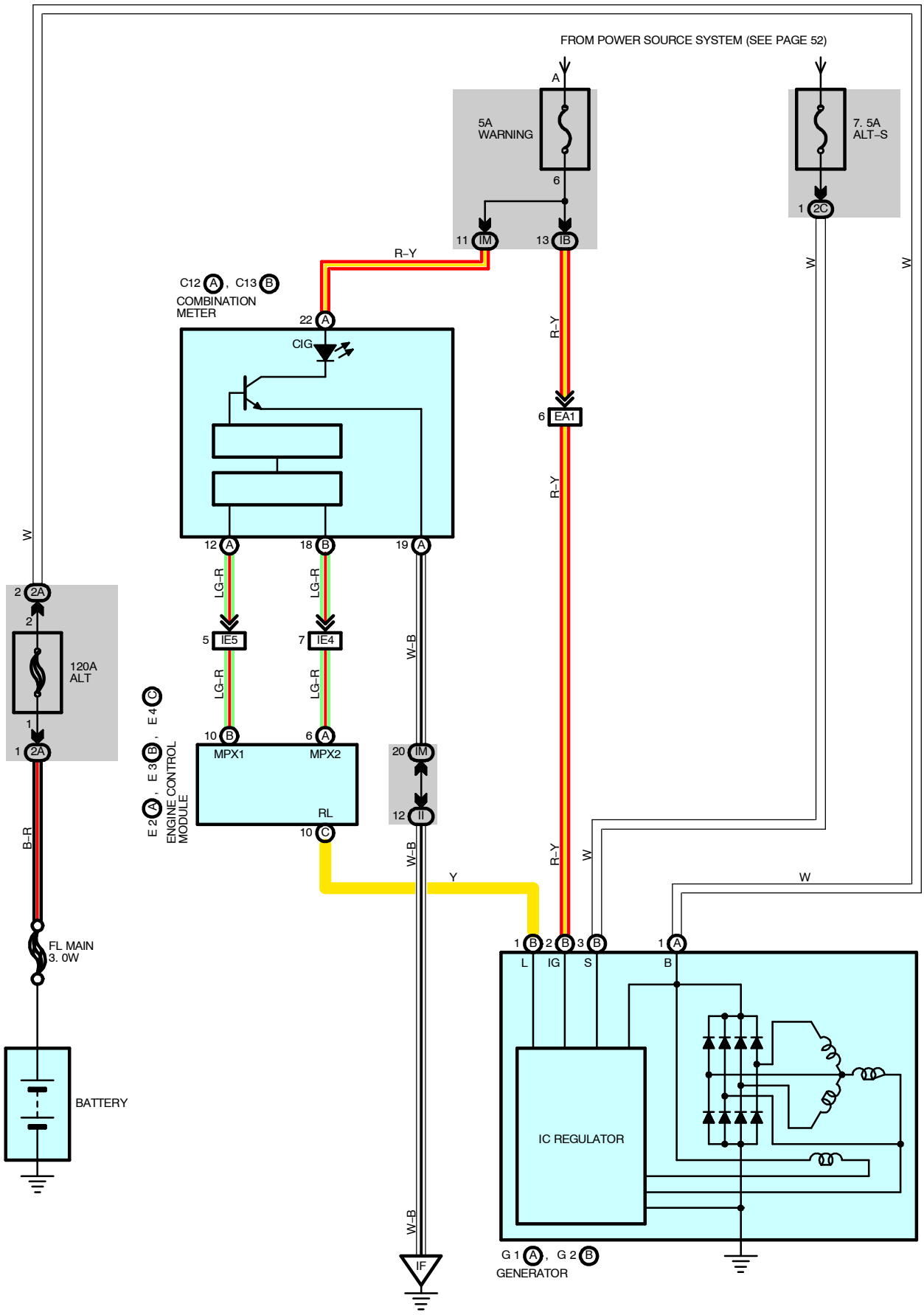
FROM POWER SOURCE SYSTEM (SEE PAGE 52)
A
5A
WARNING
6
11 IM
13 IB
7. 5A
ALT–S
1 2C
R–Y
W
C12 A , C13 B
COMBINATION
METER
22 A
CIG
6 EA1
12 A
18 B
19 A
LG–R
5 IE5
7 IE4
W–B
10 B
6 A
MPX1
MPX2
RL
10 C
20 IM
12 II
E 2 A , E 3 B , E 4 C
ENGINE CONTROL
MODULE
2 2A
120A
ALT
1 2A
B–R
FL MAIN
3. 0W
BATTERY
Y
1 B 2 B 3 B
L IG S
1 A
B
IC REGULATOR
G 1 A , G 2 B
GENERATOR
IF

SERVICE HINTS

G2 (B) GENERATOR

(B) 3–GROUND : **13.9–15.1** volts with the engine running at **2000** rpm and **25**°C (**77**°F)
13.5–14.3 volts with the engine running at **5000** rpm and **115**°C (**239**°F)

(B) 1–GROUND : **0–4** volts with the ignition SW at **ON** position and the engine not running

: PARTS LOCATION

Code		See Page	Code		See Page	Code		See Page
C12	A	36	E3	B	32 (1ZZ–FE)	G1	A	32 (1ZZ–FE)
C13	B	36			34 (2ZZ–GE)			34 (2ZZ–GE)
E2	A	32 (1ZZ–FE)	E4	C	32 (1ZZ–FE)	G2	B	32 (1ZZ–FE)
		34 (2ZZ–GE)			34 (2ZZ–GE)			34 (2ZZ–GE)

: JUNCTION BLOCK AND WIRE HARNESS CONNECTOR

Code	See Page	Junction Block and Wire Harness (Connector Location)
IB	25	Engine Room Main Wire and Instrument Panel J/B (Instrument Panel Brace RH)
II	25	Instrument Panel Wire and Instrument Panel J/B (Instrument Panel Brace RH)
IM		
2A	23	Engine Wire and Engine Room J/B (Engine Compartment Left)
2C		

: CONNECTOR JOINING WIRE HARNESS AND WIRE HARNESS

Code	See Page	Joining Wire Harness and Wire Harness (Connector Location)
EA1	40 (1ZZ–FE)	Engine Wire and Engine Room Main Wire (Inside of Engine Room R/B No.1)
	42 (2ZZ–GE)	
IE4	44	Engine Room Main Wire and Instrument Panel Wire (Instrument Panel Brace LH)
IE5		

: GROUND POINTS

Code	See Page	Ground Points Location
IF	44	Instrument Panel Brace RH

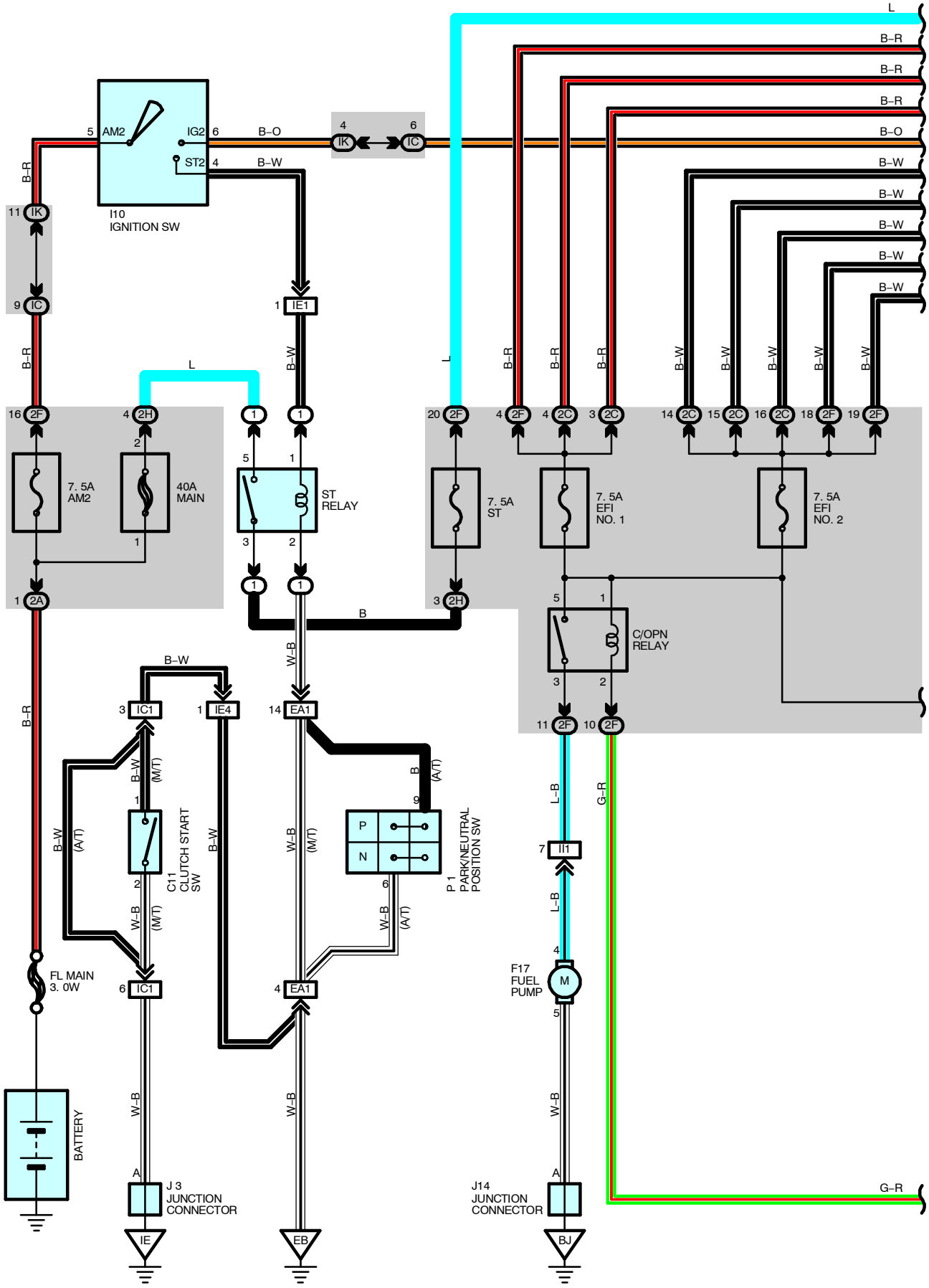
I10
IGNITION SW
AM2
IG2
ST2
7. 5A
AM2
40A
MAIN
ST
RELAY
7. 5A
ST
7. 5A
EFI
NO. 1
7. 5A
EFI
NO. 2
C/OPN
RELAY
C11
CLUTCH START
SW
P 1
PARK/NEUTRAL
POSITION SW
FL MAIN
3. 0W
BATTERY
F17
FUEL
PUMP
J 3
JUNCTION
CONNECTOR
J14
JUNCTION
CONNECTOR
IE
EB
BJ

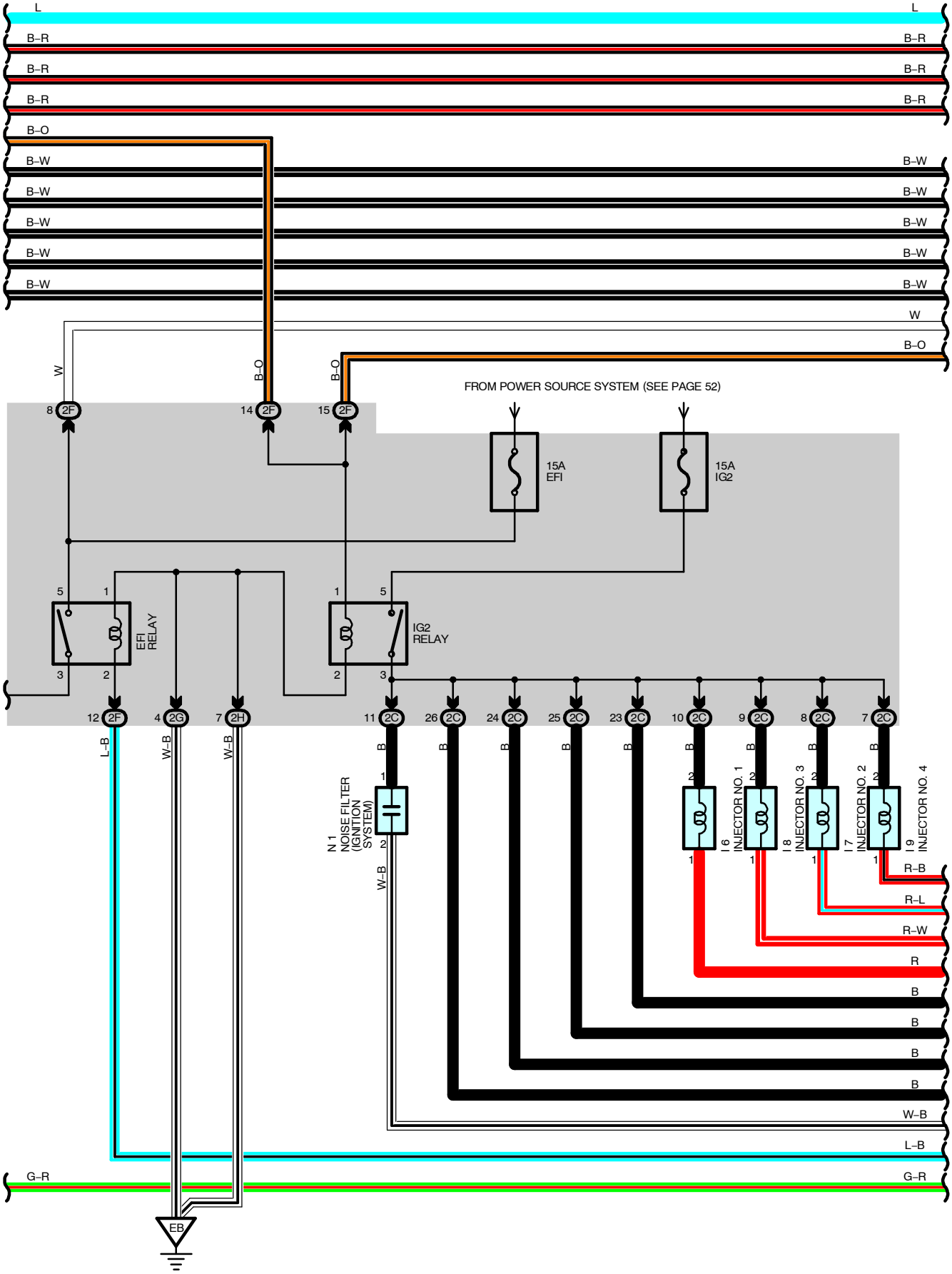
L
B–R
B–O
B–W
W
FROM POWER SOURCE SYSTEM (SEE PAGE 52)
15A
EFI
15A
IG2
EFI
RELAY
IG2
RELAY
N 1
NOISE FILTER
(IGNITION
SYSTEM)
I 6
INJECTOR NO. 1
I 8
INJECTOR NO. 3
I 7
INJECTOR NO. 2
I 9
INJECTOR NO. 4
R–B
R–L
R–W
R
B
W–B
L–B
G–R
EB

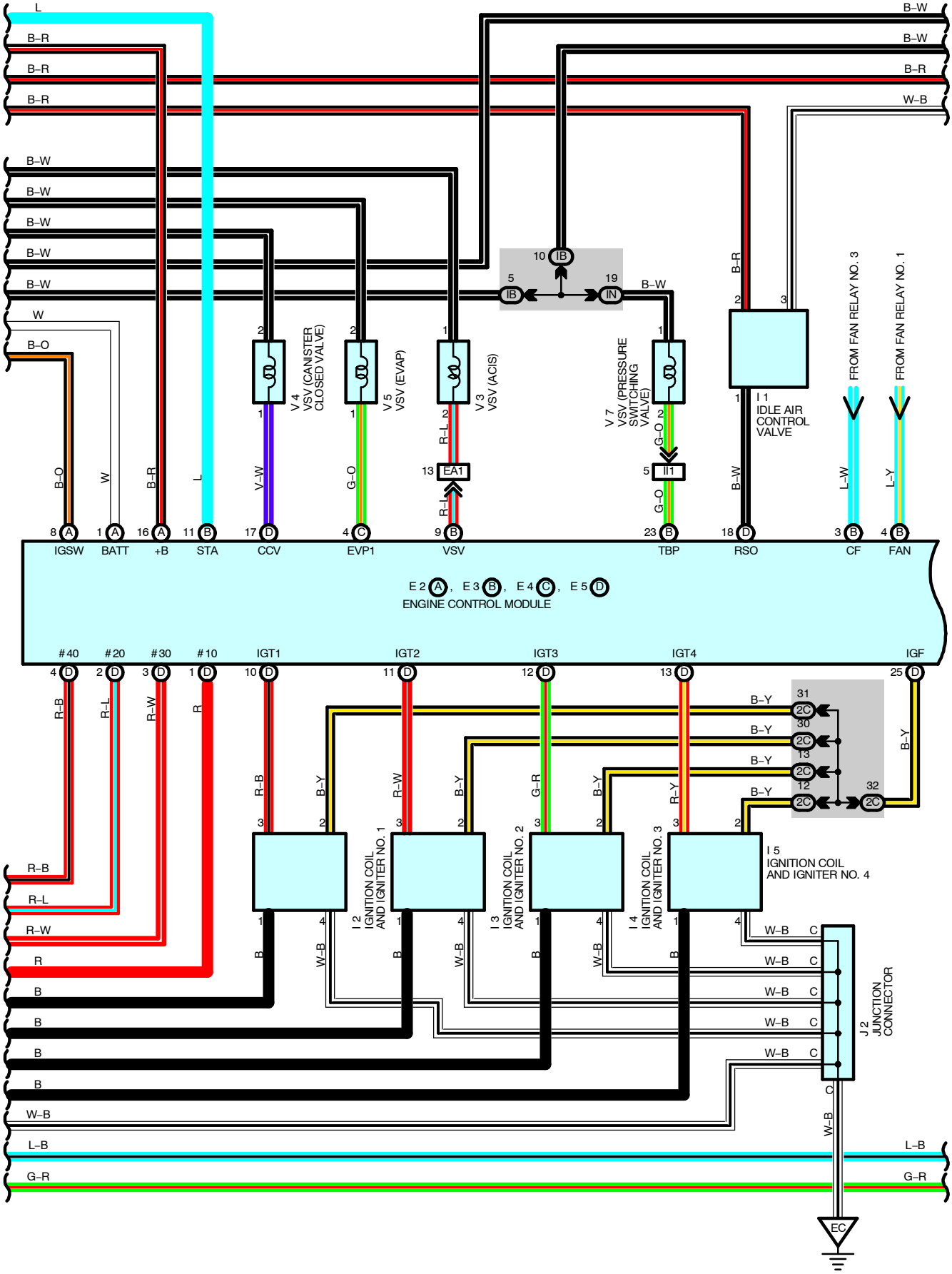
L
B–R
B–R
B–R
B–W
B–W
B–W
B–W
B–W
W
B–O
B–W
B–W
B–R
W–B
V 4
VSV (CANISTER
CLOSED VALVE)
V 5
VSV (EVAP)
V 3
VSV (ACIS)
V 7
VSV (PRESSURE
SWITCHING
VALVE)
I 1
IDLE AIR
CONTROL
VALVE
FROM FAN RELAY NO. 3
FROM FAN RELAY NO. 1
IB
IN
EA1
II1
IGSW
BATT
+B
STA
CCV
EVP1
VSV
TBP
RSO
CF
FAN
E 2 A, E 3 B, E 4 C, E 5 D
ENGINE CONTROL MODULE
#40
#20
#30
#10
IGT1
IGT2
IGT3
IGT4
IGF
I 2
IGNITION COIL
AND IGNITER NO. 1
I 3
IGNITION COIL
AND IGNITER NO. 2
I 4
IGNITION COIL
AND IGNITER NO. 3
I 5
IGNITION COIL
AND IGNITER NO. 4
J 2
JUNCTION
CONNECTOR
L–B
G–R
EC

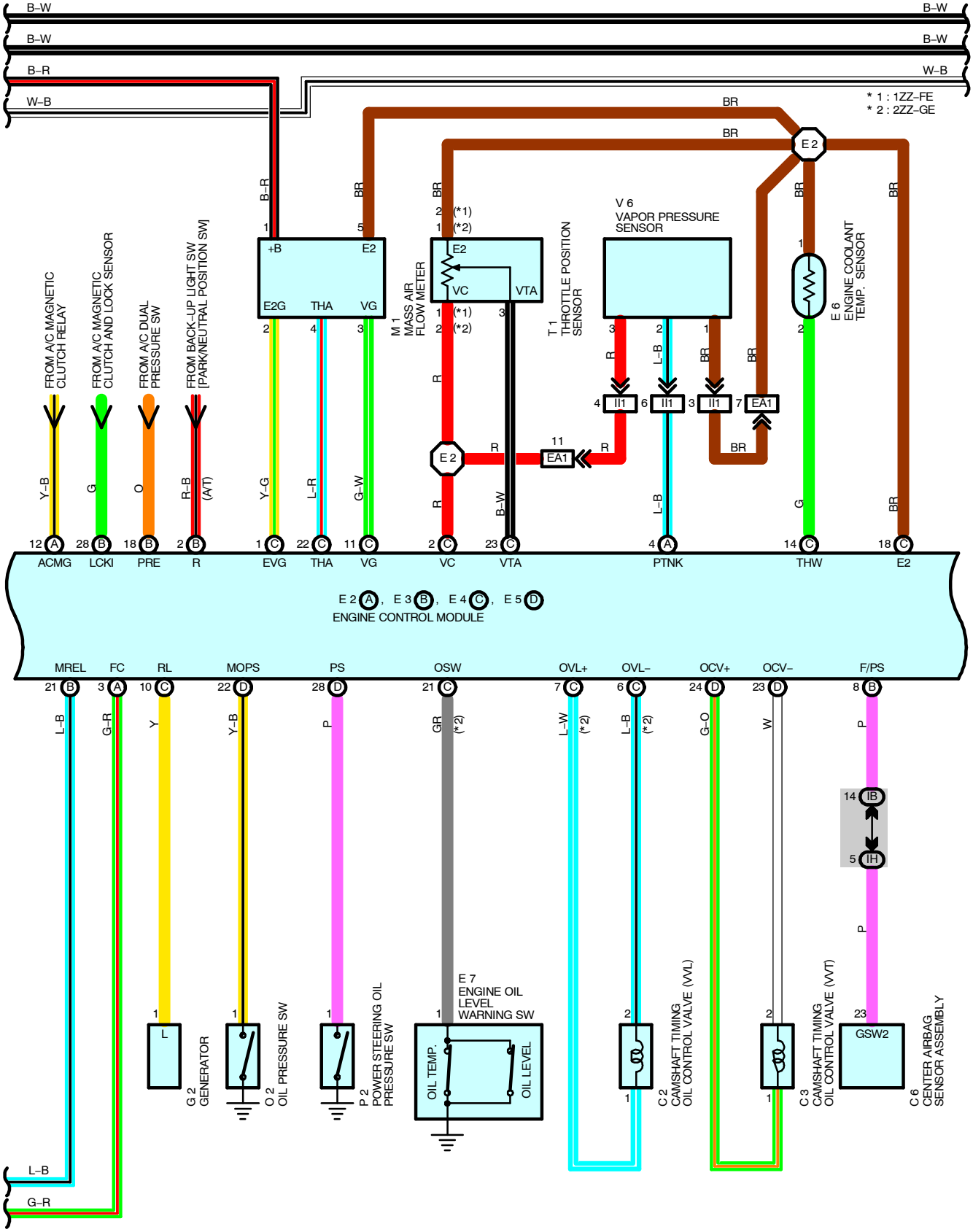
B–W
B–W
B–R
W–B
B–W
B–W
W–B
* 1 : 1ZZ–FE
* 2 : 2ZZ–GE
BR
BR
E 2
B–R
BR
BR
BR
BR
FROM A/C MAGNETIC CLUTCH RELAY
FROM A/C MAGNETIC CLUTCH AND LOCK SENSOR
FROM A/C DUAL PRESSURE SW
FROM BACK–UP LIGHT SW [PARK/NEUTRAL POSITION SW]
+B
E2
E2G
THA
VG
M 1 MASS AIR FLOW METER
E2
VC
VTA
T 1 THROTTLE POSITION SENSOR
V 6 VAPOR PRESSURE SENSOR
E 6 ENGINE COOLANT TEMP. SENSOR
(*1)
(*2)
II1
EA1
Y–B
G
O
R–B (A/T)
Y–G
L–R
G–W
R
B–W
L–B
G
BR
12 A ACMG
28 B LCKI
18 B PRE
2 B R
1 C EVG
22 C THA
11 C VG
2 C VC
23 C VTA
4 A PTNK
14 C THW
18 C E2
E 2 A, E 3 B, E 4 C, E 5 D
ENGINE CONTROL MODULE
MREL
FC
RL
MOPS
PS
OSW
OVL+
OVL–
OCV+
OCV–
F/PS
21 B
3 A
10 C
22 D
28 D
21 C
7 C
6 C
24 D
23 D
8 B
L–B
G–R
Y
Y–B
P
GR
(*2)
L–W
(*2)
L–B
(*2)
G–O
W
P
14 IB
5 IH
P
L
G 2 GENERATOR
O 2 OIL PRESSURE SW
P 2 POWER STEERING OIL PRESSURE SW
E 7 ENGINE OIL LEVEL WARNING SW
OIL TEMP.
OIL LEVEL
C 2 CAMSHAFT TIMING OIL CONTROL VALVE (VVL)
C 3 CAMSHAFT TIMING OIL CONTROL VALVE (VVT)
GSW2
C 6 CENTER AIRBAG SENSOR ASSEMBLY
L–B
G–R

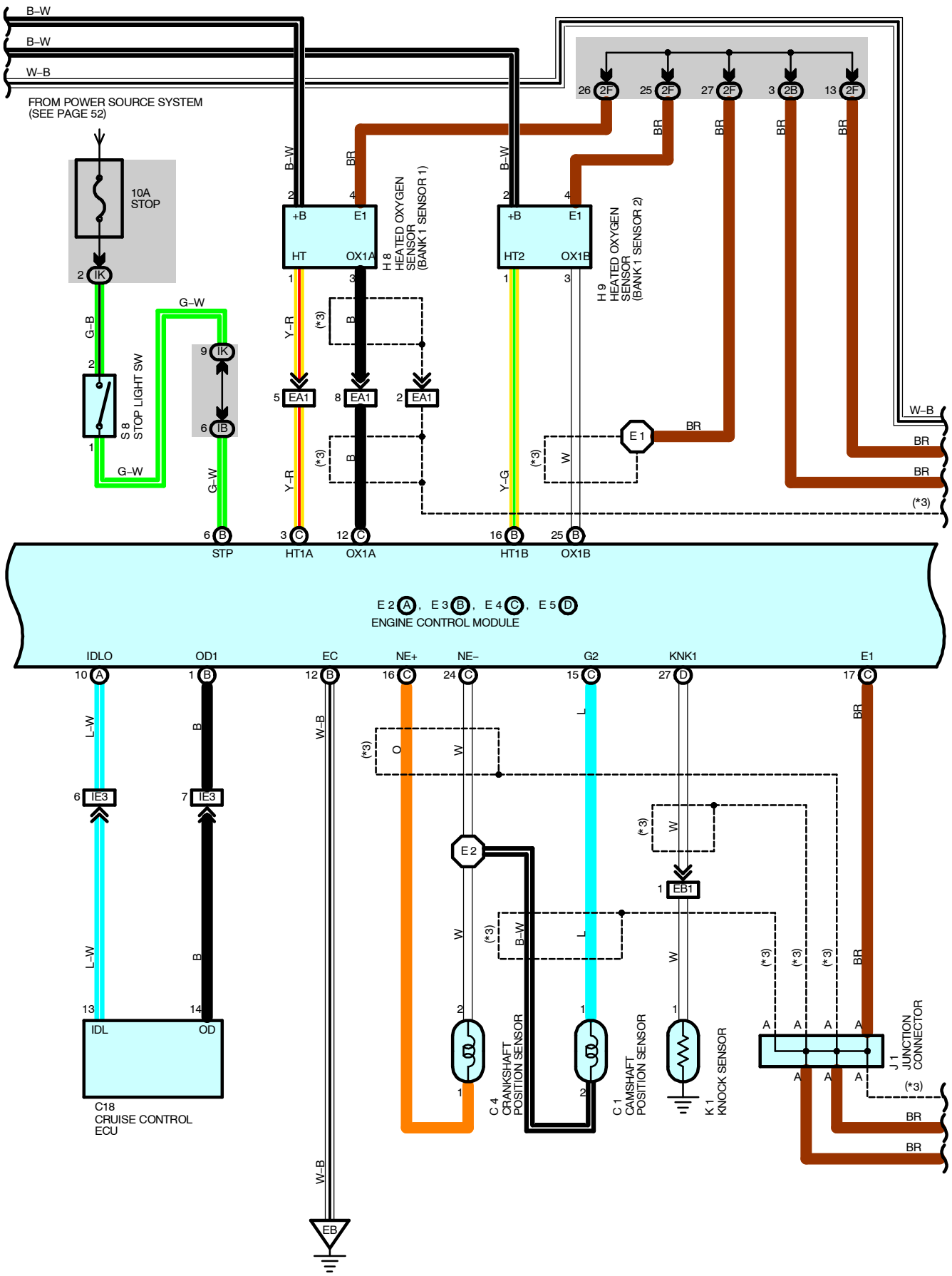
B–W
B–W
W–B
FROM POWER SOURCE SYSTEM
(SEE PAGE 52)
10A
STOP
2 IK
G–B
G–W
S 8
STOP LIGHT SW
9 IK
6 IB
G–W
G–W
6 B
STP
+B
E1
HT
OX1A
H 8
HEATED OXYGEN
SENSOR
(BANK 1 SENSOR 1)
HT2
OX1B
H 9
HEATED OXYGEN
SENSOR
(BANK 1 SENSOR 2)
Y–R
Y–R
Y–G
5 EA1
8 EA1
2 EA1
3 C
HT1A
12 C
OX1A
16 B
HT1B
25 B
OX1B
26 2F
25 2F
27 2F
3 2B
13 2F
BR
E 1
W–B
(*3)
E 2 A, E 3 B, E 4 C, E 5 D
ENGINE CONTROL MODULE
IDLO
OD1
EC
NE+
NE–
G2
KNK1
E1
10 A
1 B
12 B
16 C
24 C
15 C
27 D
17 C
L–W
B
W–B
O
W
L
BR
6 IE3
7 IE3
E 2
1 EB1
B–W
13
14
IDL
OD
C18
CRUISE CONTROL
ECU
C 4
CRANKSHAFT
POSITION SENSOR
C 1
CAMSHAFT
POSITION SENSOR
K 1
KNOCK SENSOR
J 1
JUNCTION
CONNECTOR
EB

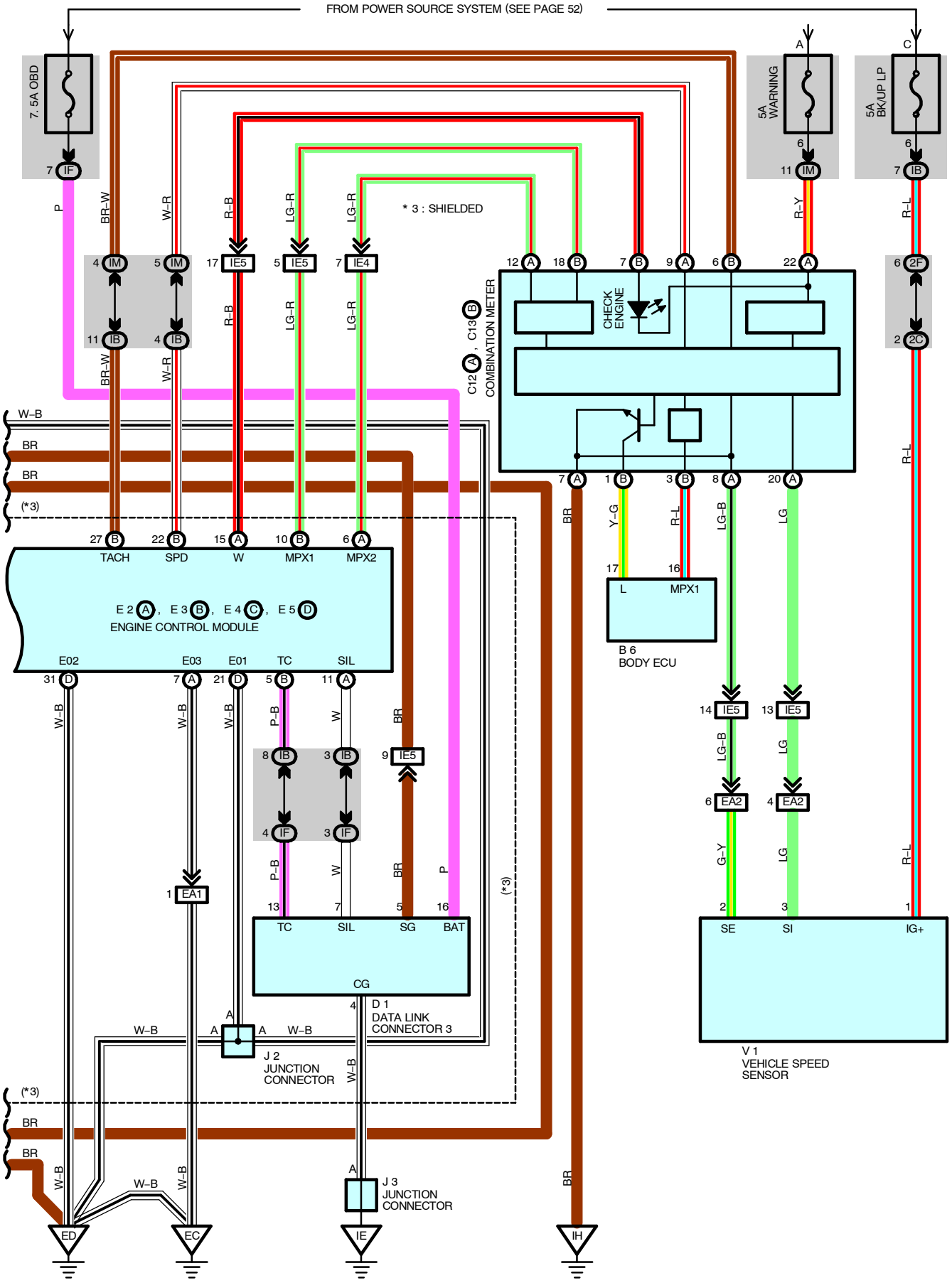
FROM POWER SOURCE SYSTEM (SEE PAGE 52)
7. 5A OBD
5A WARNING
5A BK/UP LP
* 3 : SHIELDED
COMBINATION METER
C12 A , C13 B
CHECK ENGINE
TACH
SPD
W
MPX1
MPX2
E 2 A , E 3 B , E 4 C , E 5 D
ENGINE CONTROL MODULE
E02
E03
E01
TC
SIL
B 6
BODY ECU
TC
SIL
SG
BAT
CG
D 1
DATA LINK CONNECTOR 3
J 2
JUNCTION CONNECTOR
J 3
JUNCTION CONNECTOR
SE
SI
IG+
V 1
VEHICLE SPEED SENSOR
ED
EC
IE
IH

SYSTEM OUTLINE

This system utilizes an engine control module and maintains overall control of the engine, transmission and so on. An outline of the engine control is explained here.

1. INPUT SIGNALS

(1) Engine coolant temp. signal circuit
The engine coolant temp. sensor detects the engine coolant temp. and has a built−in thermistor with a resistance which varies according to the engine coolant temp. The engine coolant temp. is input into TERMINAL THW of the engine control module as a control signal.

(2) Intake air temp. signal circuit
The intake air temp. sensor is installed in the mass air flow meter and detects the intake air temp., which is input as a control signal to TERMINAL THA of the engine control module.

(3) Oxygen sensor signal circuit
The oxygen density in the exhaust emission is detected and is input as a control signal from the heated oxygen sensors (Bank 1 sensor 1, bank 1 sensor 2) to TERMINALS OX1A, OX1B of the engine control module.
To stabilize detection performance by the heated oxygen sensors, the heated oxygen sensors are warmed. This heater is also controlled by the engine control module (HT1A, HT1B).

(4) RPM signal circuit
Camshaft position is detected by the camshaft position sensor and its signal is input to TERMINAL G2 of the engine control module as a control signal. Also, the engine RPM is detected by the crankshaft position sensor installed in the cylinder block and the signal is input into TERMINAL NE+ of the engine control module as a control signal.

(5) Throttle signal circuit
The throttle position sensor detects the throttle valve opening angle as a control signal, which is input into TERMINAL VTA of the engine control module.

(6) Vehicle speed circuit
The vehicle speed sensor, installed inside the transmission, detects the vehicle speed and inputs a control signal into TERMINAL SPD of the engine control module.

(7) A/C SW signal circuit
The operating voltage of the A/C magnetic clutch is detected and the signal is input into TERMINAL ACMG of the engine control module as a control signal.

(8) Battery signal circuit
Voltage is constantly applied to TERMINAL BATT of the engine control module. With the ignition SW turned on, Voltage for engine control module start−up power supply is applied to TERMINAL +B of the engine control module via the EFI relay.

(9) Intake air volume signal circuit
Intake air volume is detected by the mass air flow meter and the signal is input to TERMINAL VG of the engine control module as a control signal.

(10) Stop light SW signal circuit
The stop light SW is used to detect whether or not the vehicle is braking and the signal is input into TERMINAL STP of the engine control module as a control signal.

(11) Starter signal circuit
To confirm whether the engine is cranking, the voltage applied to the starter motor during cranking is detected and the signal is input into TERMINAL STA of the engine control module as a control signal.

(12) Engine knock signal circuit
Engine knocking is detected by knock sensor and the signal is input into TERMINAL KNK as a control signal.

2. CONTROL SYSTEM

* SFI system
The SFI system monitors the engine condition through the signals input from each sensor (Input signals from (1) to (12) etc.) to the engine control module. The best fuel injection timing is decided based on this data and the program memorized by the engine control module, and the control signal is output to TERMINALS #10, #20, #30 and #40 of the engine control module to operate the injector (Inject the fuel). The sequential multiport fuel injection (Electronic fuel injection) system controls the fuel injection operation by the engine control module in response to the driving conditions.
* ESA system
The ESA system monitors the engine condition through the signals input to the engine control module from each sensor (Input signals from (1), (2), (4) to (12) etc.). The best ignition timing is decided according to this data and the memorized data in the engine control module, and the control signal is output to TERMINALS IGT1, IGT2, IGT3 and IGT4. This signal controls the igniter to provide the best ignition timing for the driving conditions.
* Heated oxygen sensor heater control system
The heated oxygen sensor heater control system turns the heater on when the intake air volume is low (Temp. of exhaust emissions is low), and warms up the heated oxygen sensors (Bank 1 sensor 1, bank 1 sensor 2) to improve detection performance of the sensors.
The engine control module evaluates the signals from each sensor (Input signals from (1), (2), (4), (8) to (10) etc.), and outputs current to TERMINALS HT1A, HT1B to control the heater.
* ACIS
ACIS includes a valve in the bulkhead separating the surge tank into two parts. This valve is opened and closed in accordance with the driving conditions to control the intake manifold length in two stages for increased engine output in all ranges from low to high speeds.
The engine control module judges the engine speed by the signals ((4), (5)) from each sensor and outputs signals to the TERMINAL VSV to control the VSV (ACIS).
* MPX
The MPX communicates with the combination meter, as well as body ECU of the multiplex communication system

3. DIAGNOSIS SYSTEM

With the diagnosis system, when there is a malfunction in the engine control module signal system, the malfunctioning system is recorded in the memory. The malfunctioning system can be found by reading the code displayed by the malfunction indicator lamp.

4. FAIL−SAFE SYSTEM

When a malfunction has occurred in any system, if there is a possibility of engine trouble being caused by continued control based on the signals from that system, the fail−safe system either controls the system by using data (Standard values) recorded in the engine control module memory or else stops the engine.

SERVICE HINTS

E2 (A), E3 (B), E4 (C), E5 (D) ENGINE CONTROL MODULE

BATT−E1 : Always **9.0**−**14.0** volts
+B−E1 : **9.0**−**14.0** volts (Ignition SW at **ON** position)
VC−E2 : **4.5**−**5.5** volts (Ignition SW at **ON** position)
VTA−E2 : **0.3**−**0.8** volts (Ignition SW ON and throttle valve fully closed)
3.2−**4.9** volts (Ignition SW ON and throttle valve open)
THA−E2 : **0.5**−**3.4** volts (Ignition SW ON and intake air temp. **20**°C, **68**°F)
THW−E2 : **0.2**−**1.0** volts (Ignition SW ON and coolant temp. **80**°C, **176**°F)
STA−E1 : **6.0**−**14.0** volts (Engine cranking)
W−E1 : **9.0**−**14.0** volts (No trouble and engine running)
STP−E1 : **9.0**−**14.0** volts (Brake pedal depress)
RSO−E1 : **9.0**−**14.0** volts (Ignition SW at **ON** position)
IGT1, IGT2, IGT3, IGT4−E1 : **0.8**−**1.2** volts (Engine cranking or idling)
#10, #20, #30, #40−E01, E02 : **9.0**−**14.0** volts (Ignition SW at **ON** position)

RESISTANCE OF ECU WIRING CONNECTORS

(Disconnect wiring connector)
VTA−E2 : **3.3**−**10.0** kΩ (Throttle valve fully open)
0.2−**0.8** kΩ (Throttle valve fully closed)
VC−E2 : **3.0**−**7.0** kΩ
THA−E2 : **2.0**−**3.0** kΩ (Intake air temp. **20**°C, **68**°F)
THW−E2 : **0.2**−**0.4** kΩ (Coolant temp. **80**°C, **176**°F)
RSO : **19.3**−**22.3** Ω

C/OPN RELAY

5−3 : Closed with the starter cranking and engine running

EFI RELAY

3−5 : Closed with the ignition SW at **ON** or **ST** position

E6 ENGINE COOLANT TEMP. SENSOR

1−2 : **10.0**−**20.0** kΩ (**−20**°C, **−4**°F)
4.0−**7.0** k Ω (**0**°C, **32**°F)
2.0−**3.0** kΩ (**20**°C, **68**°F)
0.9−**1.3** kΩ (**40**°C, **104**°F)
0.4−**0.7** kΩ (**60**°C, **140**°F)
0.2−**0.4** kΩ (**80**°C, **176**°F)

: PARTS LOCATION

Code	See Page	Code	See Page	Code	See Page
B6	36	G2	34 (2ZZ–GE)	J14	38
C1	32 (1ZZ–FE)	H8	37	K1	33 (1ZZ–FE)
	34 (2ZZ–GE)	H9	37		35 (2ZZ–GE)
C2	34 (2ZZ–GE)	I1	33 (1ZZ–FE)	M1	33 (1ZZ–FE)
C3	32 (1ZZ–FE)		35 (2ZZ–GE)		35 (2ZZ–GE)
	34 (2ZZ–GE)	I2	33 (1ZZ–FE)	N1	33 (1ZZ–FE)
C4	32 (1ZZ–FE)		35 (2ZZ–GE)		35 (2ZZ–GE)
	34 (2ZZ–GE)	I3	33 (1ZZ–FE)	O2	33 (1ZZ–FE)
C6	36		35 (2ZZ–GE)		35 (2ZZ–GE)
C11	36	I4	33 (1ZZ–FE)	P1	33 (1ZZ–FE)
C12 A	36		35 (2ZZ–GE)		35 (2ZZ–GE)
C13 B	36	I5	33 (1ZZ–FE)	P2	33 (1ZZ–FE)
C18	36		35 (2ZZ–GE)		35 (2ZZ–GE)
D1	36	I6	33 (1ZZ–FE)	S8	37
E2 A	32 (1ZZ–FE)		35 (2ZZ–GE)	T1	33 (1ZZ–FE)
	34 (2ZZ–GE)	I7	33 (1ZZ–FE)		35 (2ZZ–GE)
E3 B	32 (1ZZ–FE)		35 (2ZZ–GE)	V1	33 (1ZZ–FE)
	34 (2ZZ–GE)	I8	33 (1ZZ–FE)		35 (2ZZ–GE)
E4 C	32 (1ZZ–FE)		35 (2ZZ–GE)	V3	33 (1ZZ–FE)
	34 (2ZZ–GE)	I9	33 (1ZZ–FE)		35 (2ZZ–GE)
E5 D	32 (1ZZ–FE)		35 (2ZZ–GE)	V4	33 (1ZZ–FE)
	34 (2ZZ–GE)	I10	37		35 (2ZZ–GE)
E6	32 (1ZZ–FE)	J1	33 (1ZZ–FE)	V5	33 (1ZZ–FE)
	34 (2ZZ–GE)		35 (2ZZ–GE)		35 (2ZZ–GE)
E7	34 (2ZZ–GE)	J2	33 (1ZZ–FE)	V6	39
F17	38		35 (2ZZ–GE)	V7	39
G2	32 (1ZZ–FE)	J3	37		

: RELAY BLOCKS

Code	See Page	Relay Blocks (Relay Block Location)
1	26	Engine Room R/B No.1 (Engine Compartment Left)

: JUNCTION BLOCK AND WIRE HARNESS CONNECTOR

Code	See Page	Junction Block and Wire Harness (Connector Location)
IB	25	Engine Room Main Wire and Instrument Panel J/B (Instrument Panel Brace RH)
IC		
IF	25	Instrument Panel Wire and Instrument Panel J/B (Instrument Panel Brace RH)
IH		
IK		
IM		
IN	25	Floor Wire and Instrument Panel J/B (Instrument Panel Brace RH)
2A	23	Engine Wire and Engine Room J/B (Engine Compartment Left)
2B		
2C		
2F	23	Engine Room Main Wire and Engine Room J/B (Engine Compartment Left)
2G		
2H		

: CONNECTOR JOINING WIRE HARNESS AND WIRE HARNESS

Code	See Page	Joining Wire Harness and Wire Harness (Connector Location)
EA1	40 (1ZZ–FE)	Engine Wire and Engine Room Main Wire (Inside of Engine Room R/B No.1)
	42 (2ZZ–GE)	
EA2	40 (1ZZ–FE)	
	42 (2ZZ–GE)	
EB1	40 (1ZZ–FE)	Engine No.4 Wire and Engine Wire (Under the Intake Manifold)
	42 (2ZZ–GE)	
IC1	44	Instrument Panel Wire and Instrument Panel No.2 Wire (Instrument Panel Reinforcement LH)
IE1	44	Engine Room Main Wire and Instrument Panel Wire (Instrument Panel Brace LH)
IE3		
IE4		
IE5		
II1	46	Engine Room Main Wire and Floor Wire (Instrument Panel Brace LH)

: GROUND POINTS

Code	See Page	Ground Points Location
EB	40 (1ZZ–FE)	Front Left Fender
	42 (2ZZ–GE)	
EC	40 (1ZZ–FE)	Cylinder Head Cover LH
	42 (2ZZ–GE)	
ED	40 (1ZZ–FE)	
	42 (2ZZ–GE)	
IE	44	Cowl Side Panel LH
IH	44	Cowl Side Panel RH
BJ	48	Luggage Room Left

: SPLICE POINTS

Code	See Page	Wire Harness with Splice Points	Code	See Page	Wire Harness with Splice Points
E1	40 (1ZZ–FE)	Engine Room Main Wire	E2	40 (1ZZ–FE)	Engine Wire
	42 (2ZZ–GE)			42 (2ZZ–GE)	

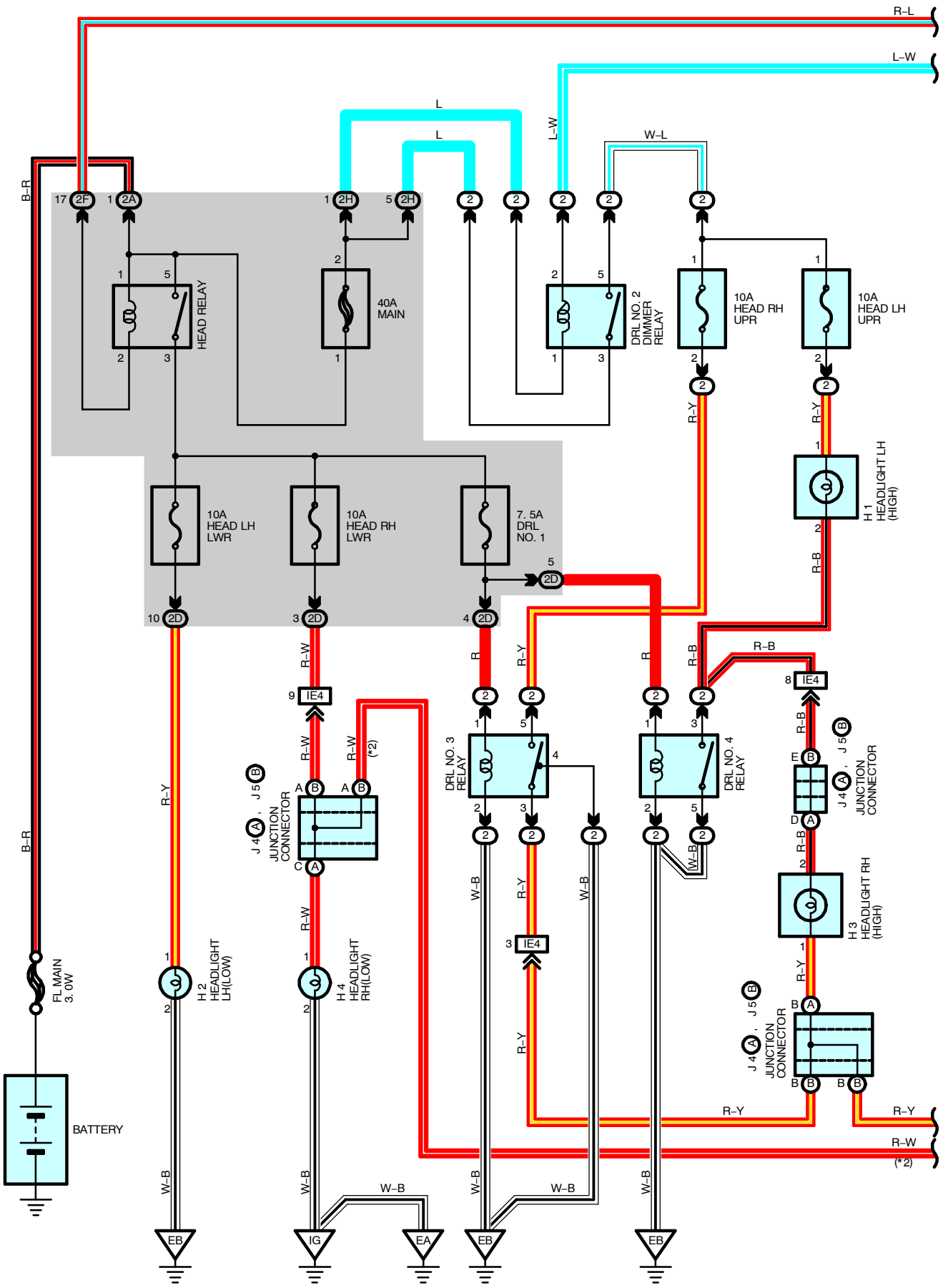
R–L
L–W
L
L
L–W
W–L
B–R
17 2F
1 2A
1 2H
5 2H
2
HEAD RELAY
40A
MAIN
DRL NO. 2
DIMMER
RELAY
10A
HEAD RH
UPR
10A
HEAD LH
UPR
R–Y
H 1
HEADLIGHT LH
(HIGH)
R–B
10A
HEAD LH
LWR
10A
HEAD RH
LWR
7. 5A
DRL
NO. 1
2D
R–W
R
IE4
DRL NO. 3
RELAY
DRL NO. 4
RELAY
J 4 A , J 5 B
JUNCTION
CONNECTOR
(*2)
W–B
H 3
HEADLIGHT RH
(HIGH)
FL MAIN
3. 0W
H 2
HEADLIGHT
LH(LOW)
H 4
HEADLIGHT
RH(LOW)
BATTERY
EB
IG
EA

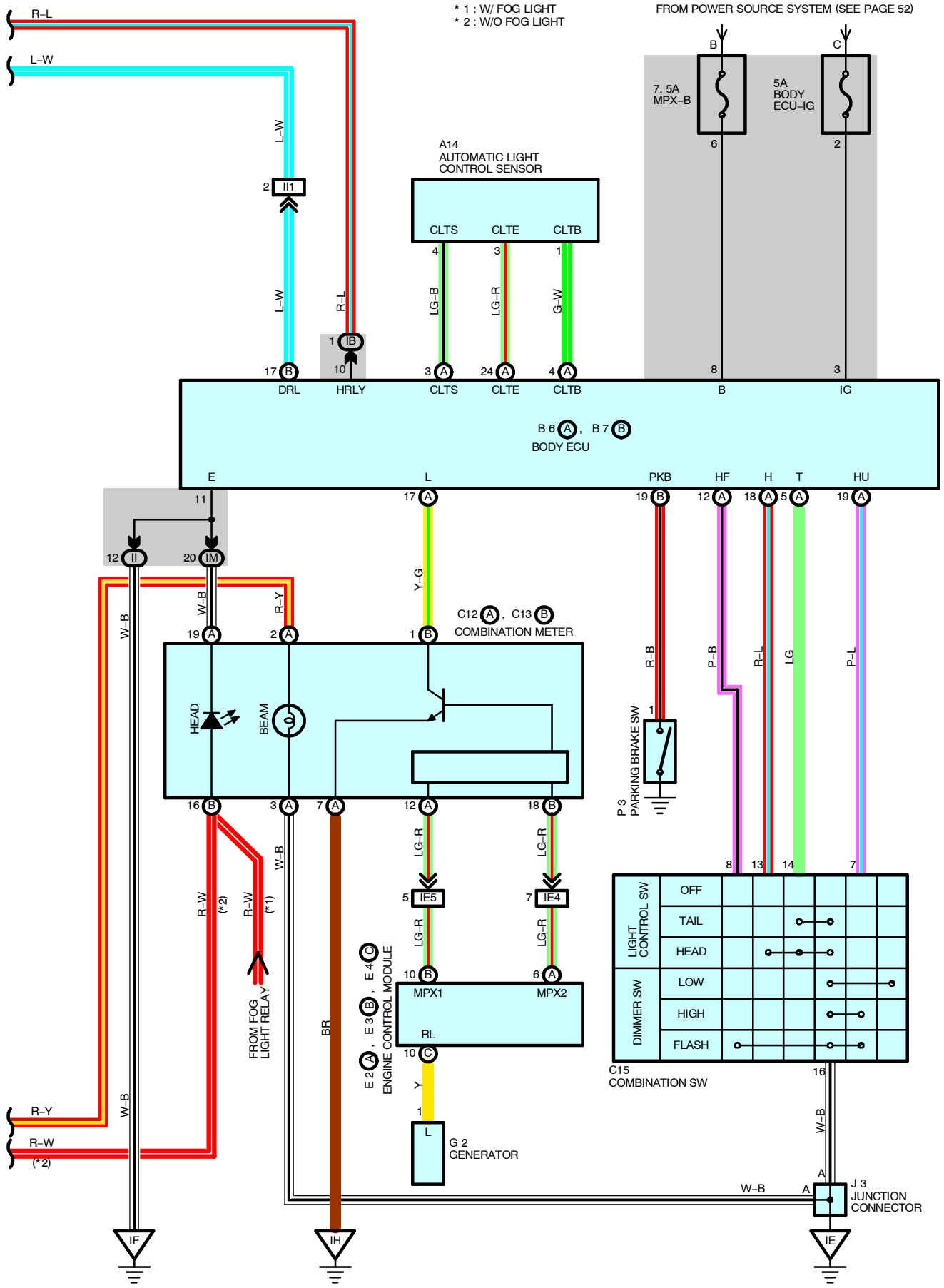
* 1 : W/ FOG LIGHT
* 2 : W/O FOG LIGHT
FROM POWER SOURCE SYSTEM (SEE PAGE 52)
7. 5A MPX–B
5A BODY ECU–IG
A14 AUTOMATIC LIGHT CONTROL SENSOR
CLTS
CLTE
CLTB
DRL
HRLY
B
IG
B 6 A , B 7 B
BODY ECU
C12 A , C13 B
COMBINATION METER
HEAD
BEAM
P 3 PARKING BRAKE SW
LIGHT CONTROL SW
OFF
TAIL
HEAD
DIMMER SW
LOW
HIGH
FLASH
C15 COMBINATION SW
MPX1
MPX2
RL
E 2 A , E 3 B , E 4 C
ENGINE CONTROL MODULE
FROM FOG LIGHT RELAY
G 2 GENERATOR
J 3 JUNCTION CONNECTOR
IF
IH
IE

HEADLIGHT

SYSTEM OUTLINE

When the following conditions are met while the ignition SW is ON, and if the light control SW is at OFF or TAIL position, the daytime running light is controlled.
* Parking brake lever is released (Parking brake SW is OFF)
* Input signal from the generator

If any of the following conditions are met, the daytime running light control is canceled.
* Ignition SW is turned OFF.
* Light control SW is at HEAD position.

SERVICE HINTS

HEAD RELAY

5–3 : Closed with the light control SW at **HEAD** position or the dimmer SW at **FLASH** position
Closed with the engine running and the parking brake lever released (Parking brake SW off)

C15 COMBINATION SW

13–16 : Closed with the light control SW at **HEAD** position
8–16 : Closed with the dimmer SW at **FLASH** position
7–16 : Closed with the dimmer SW at **FLASH** or **HIGH** position

P3 PARKING BRAKE SW

1–GROUND : Closed with the parking brake lever pulled up

: PARTS LOCATION

Code		See Page	Code		See Page	Code		See Page
A14		36	E3	B	34 (2ZZ–GE)	H3		32 (1ZZ–FE)
B6	A	36	E4	C	32 (1ZZ–FE)			34 (2ZZ–GE)
B7	B	36			34 (2ZZ–GE)	H4		32 (1ZZ–FE)
C12	A	36	G2		32 (1ZZ–FE)			34 (2ZZ–GE)
C13	B	36			34 (2ZZ–GE)	J3		37
C15		36	H1		32 (1ZZ–FE)	J4	A	37
E2	A	32 (1ZZ–FE)			34 (2ZZ–GE)	J5	B	37
		34 (2ZZ–GE)	H2		32 (1ZZ–FE)	P3		37
E3	B	32 (1ZZ–FE)			34 (2ZZ–GE)			

: RELAY BLOCKS

Code	See Page	Relay Blocks (Relay Block Location)
2	27	Engine Room R/B No.2 (Engine Compartment Left)

: JUNCTION BLOCK AND WIRE HARNESS CONNECTOR

Code	See Page	Junction Block and Wire Harness (Connector Location)
IB	25	Engine Room Main Wire and Instrument Panel J/B (Instrument Panel Brace RH)
II	25	Instrument Panel Wire and Instrument Panel J/B (Instrument Panel Brace RH)
IM		
2A	23	Engine Wire and Engine Room J/B (Engine Compartment Left)
2D	23	Engine Room Main Wire and Engine Room J/B (Engine Compartment Left)
2F		
2H		

: CONNECTOR JOINING WIRE HARNESS AND WIRE HARNESS

Code	See Page	Joining Wire Harness and Wire Harness (Connector Location)
IE4	44	Engine Room Main Wire and Instrument Panel Wire (Instrument Panel Brace LH)
IE5		
II1	46	Engine Room Main Wire and Floor Wire (Instrument Panel Brace LH)

▽ : GROUND POINTS

Code	See Page	Ground Points Location
EA	40 (1ZZ–FE)	Front Right Fender
	42 (2ZZ–GE)	
EB	40 (1ZZ–FE)	Front Left Fender
	42 (2ZZ–GE)	
IE	44	Cowl Side Panel LH
IF	44	Instrument Panel Brace RH
IG	44	Cowl Side Panel RH
IH		

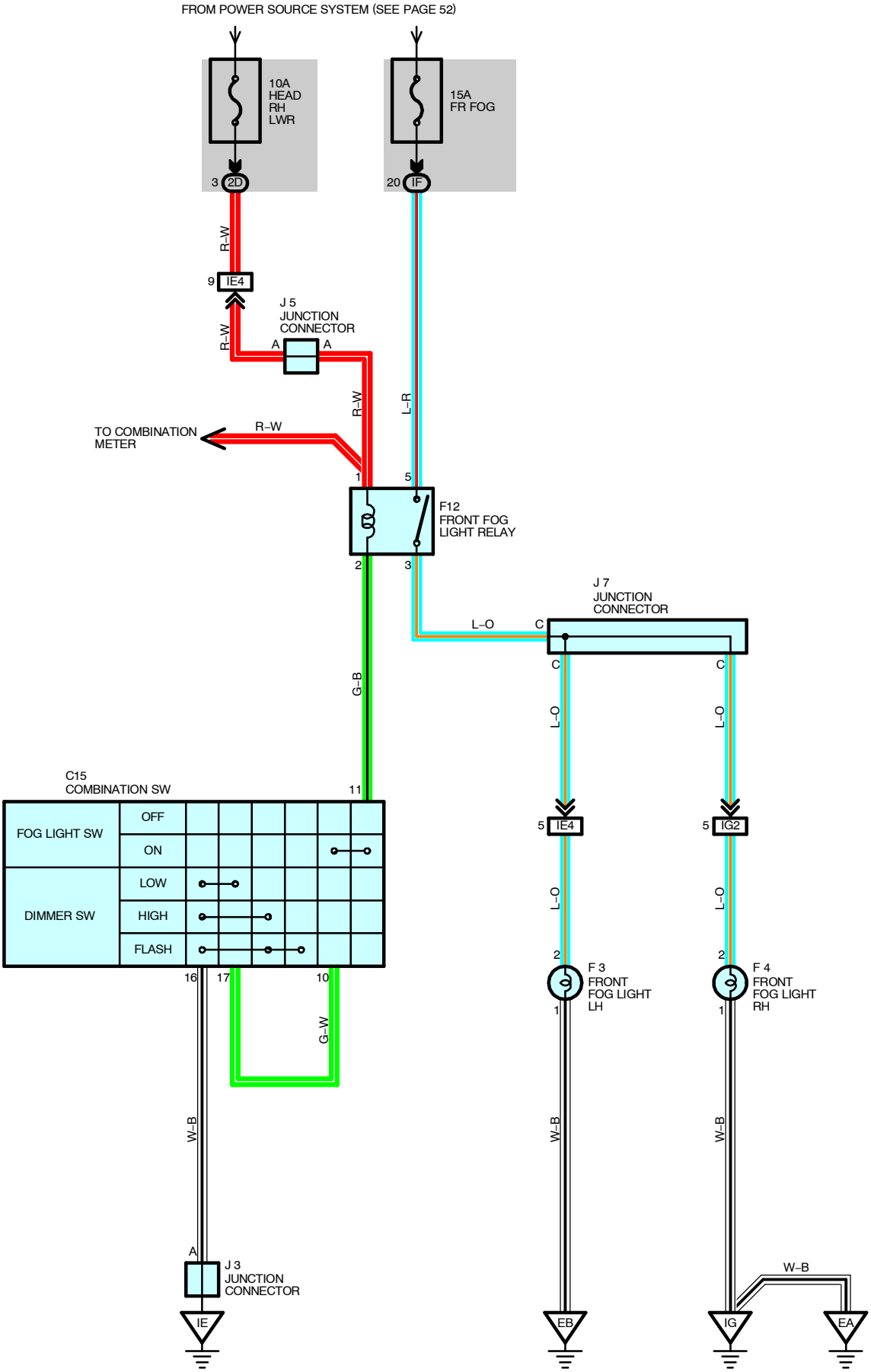
FROM POWER SOURCE SYSTEM (SEE PAGE 52)
10A
HEAD
RH
LWR
15A
FR FOG
3 2D
20 IF
R-W
9 IE4
J 5
JUNCTION
CONNECTOR
A A
R-W
R-W
L-R
TO COMBINATION
METER
R-W
1
5
F12
FRONT FOG
LIGHT RELAY
2
3
J 7
JUNCTION
CONNECTOR
L-O
C
C
C
G-B
L-O
L-O
C15
COMBINATION SW
11
FOG LIGHT SW
OFF
ON
DIMMER SW
LOW
HIGH
FLASH
5 IE4
5 IG2
L-O
L-O
2
2
F 3
FRONT
FOG LIGHT
LH
F 4
FRONT
FOG LIGHT
RH
1
1
16
17
10
G-W
W-B
W-B
W-B
A
J 3
JUNCTION
CONNECTOR
W-B
IE
EB
IG
EA

SERVICE HINTS

F12 FRONT FOG LIGHT RELAY

5–3 : Closed with the dimmer SW at **LOW** position and the fog light SW at **ON** position

: PARTS LOCATION

Code	See Page	Code	See Page	Code	See Page
C15	36	F4	32 (1ZZ–FE)	J3	37
F3	32 (1ZZ–FE)		34 (2ZZ–GE)	J5	37
	34 (2ZZ–GE)	F12	36	J7	37

: JUNCTION BLOCK AND WIRE HARNESS CONNECTOR

Code	See Page	Junction Block and Wire Harness (Connector Location)
IF	25	Instrument Panel Wire and Instrument Panel J/B (Instrument Panel Brace RH)
2D	23	Engine Room Main Wire and Engine Room J/B (Engine Compartment Left)

: CONNECTOR JOINING WIRE HARNESS AND WIRE HARNESS

Code	See Page	Joining Wire Harness and Wire Harness (Connector Location)
IE4	44	Engine Room Main Wire and Instrument Panel Wire (Instrument Panel Brace LH)
IG2	46	Engine Room No.2 Wire and Instrument Panel Wire (Right Kick Panel)

: GROUND POINTS

Code	See Page	Ground Points Location
EA	40 (1ZZ–FE)	Front Right Fender
	42 (2ZZ–GE)	
EB	40 (1ZZ–FE)	Front Left Fender
	42 (2ZZ–GE)	
IE	44	Cowl Side Panel LH
IG	44	Cowl Side Panel RH

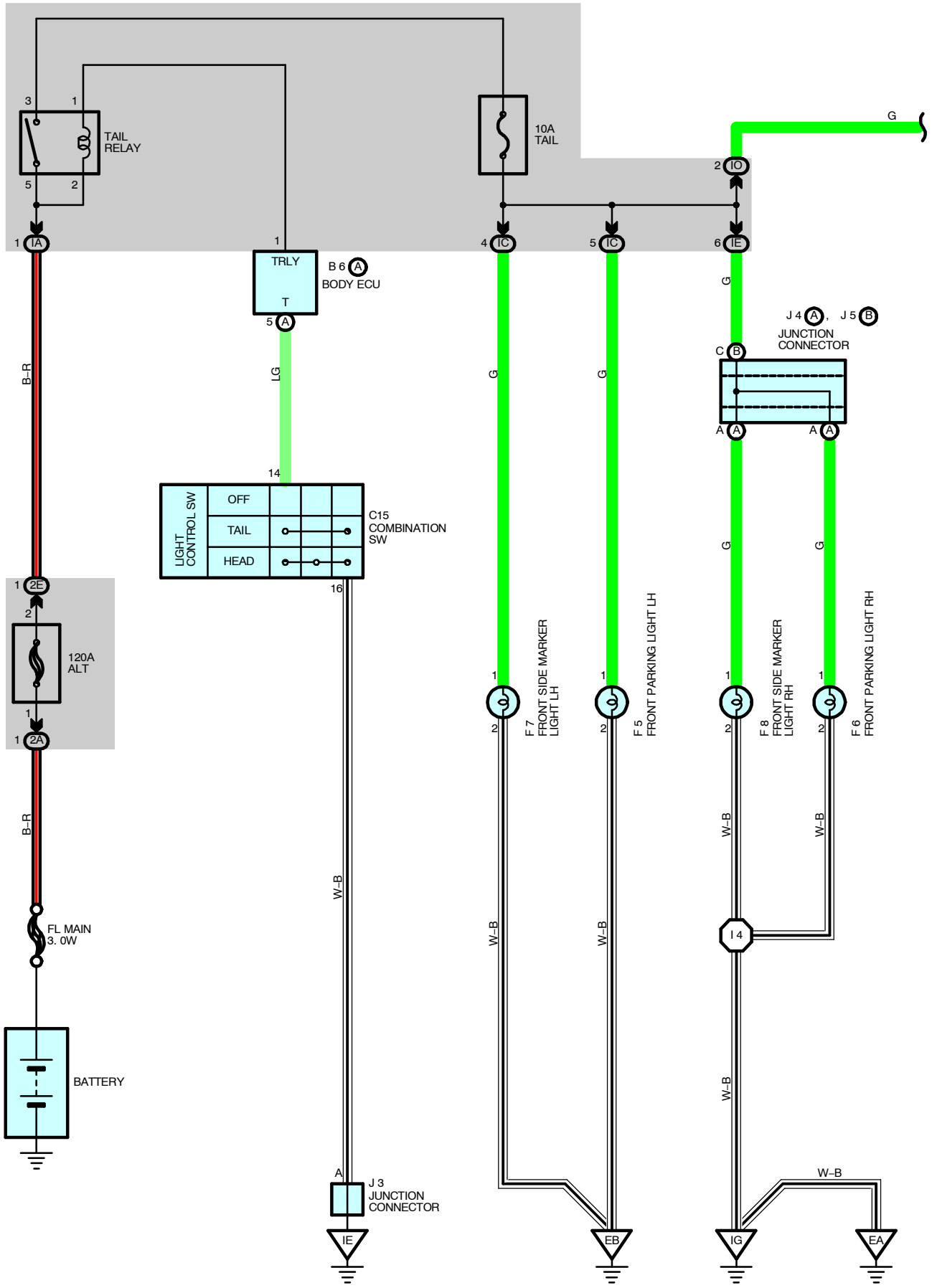
TAIL RELAY
10A TAIL
TRLY
B 6 A
BODY ECU
J 4 A , J 5 B
JUNCTION CONNECTOR
LIGHT CONTROL SW
OFF
TAIL
HEAD
C15 COMBINATION SW
120A ALT
FL MAIN 3. 0W
BATTERY
F 7 FRONT SIDE MARKER LIGHT LH
F 5 FRONT PARKING LIGHT LH
F 8 FRONT SIDE MARKER LIGHT RH
F 6 FRONT PARKING LIGHT RH
J 3 JUNCTION CONNECTOR
I 4
IE
EB
IG
EA
B-R
LG
G
W-B

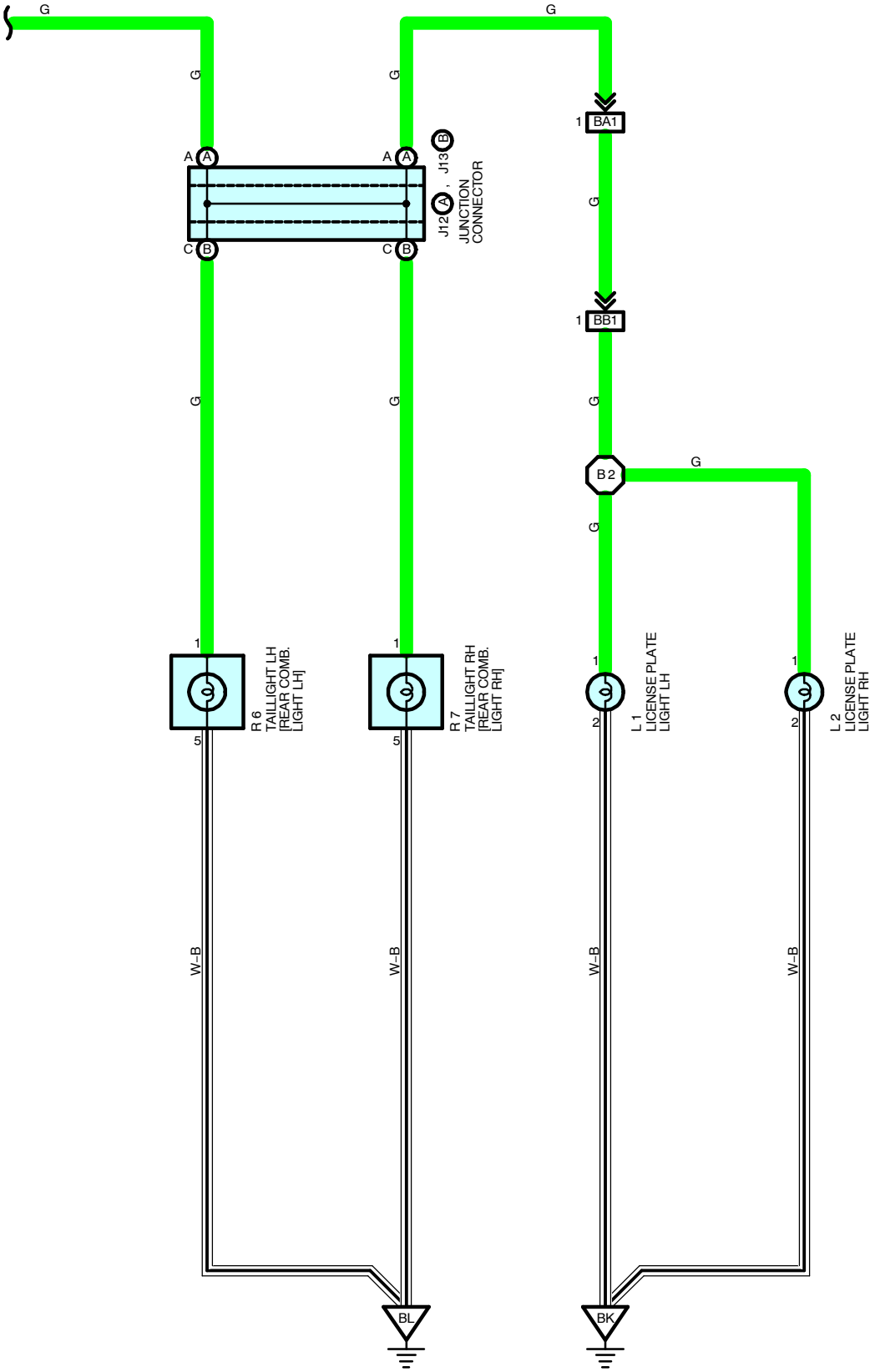
G
G
G
G
A
A
A
A
C
B
C
B
J12 A , J13 B
JUNCTION CONNECTOR
1
BA1
G
1
BB1
G
G
G
B2
G
G
1
R 6
TAILLIGHT LH
[REAR COMB. LIGHT LH]
5
1
R 7
TAILLIGHT RH
[REAR COMB. LIGHT RH]
5
1
L 1
LICENSE PLATE LIGHT LH
2
1
L 2
LICENSE PLATE LIGHT RH
2
W–B
W–B
W–B
W–B
BL
BK

TAILLIGHT

SERVICE HINTS

TAIL RELAY

5–3 : Closed with the light control SW at **TAIL** or **HEAD** position

C15 COMBINATION SW

14–16 : Closed with the light control SW at **TAIL** or **HEAD** position

: PARTS LOCATION

Code		See Page	Code		See Page	Code		See Page
B6	A	36	F7		34 (2ZZ–GE)	J13	B	38
C15		36	F8		32 (1ZZ–FE)	L1		38
F5		32 (1ZZ–FE)			34 (2ZZ–GE)	L2		38
		34 (2ZZ–GE)	J3		37	R6		39
F6		32 (1ZZ–FE)	J4	A	37	R7		39
		34 (2ZZ–GE)	J5	B	37			
F7		32 (1ZZ–FE)	J12	A	38			

: JUNCTION BLOCK AND WIRE HARNESS CONNECTOR

Code	See Page	Junction Block and Wire Harness (Connector Location)
IA	25	Engine Room Main Wire and Instrument Panel J/B (Instrument Panel Brace RH)
IC		
IE	25	Instrument Panel Wire and Instrument Panel J/B (Instrument Panel Brace RH)
IO	25	Floor Wire and Instrument Panel J/B (Instrument Panel Brace RH)
2A	23	Engine Wire and Engine Room J/B (Engine Compartment Left)
2E	23	Engine Room Main Wire and Engine Room J/B (Engine Compartment Left)

: CONNECTOR JOINING WIRE HARNESS AND WIRE HARNESS

Code	See Page	Joining Wire Harness and Wire Harness (Connector Location)
BA1	48	Back Door No.1 Wire and Floor Wire (Quarter Panel LH)
BB1	48	Back Door No.2 Wire and Back Door No.1 Wire (Back Door Upper Left)

: GROUND POINTS

Code	See Page	Ground Points Location
EA	40 (1ZZ–FE)	Front Right Fender
	42 (2ZZ–GE)	
EB	40 (1ZZ–FE)	Front Left Fender
	42 (2ZZ–GE)	
IE	44	Cowl Side Panel LH
IG	44	Cowl Side Panel RH
BK	48	Back Dooe Left
BL	48	Back Panel Center

: SPLICE POINTS

Code	See Page	Wire Harness with Splice Points	Code	See Page	Wire Harness with Splice Points
I4	46	Engine Room No.2 Wire	B2	48	Back Door No.2 Wire

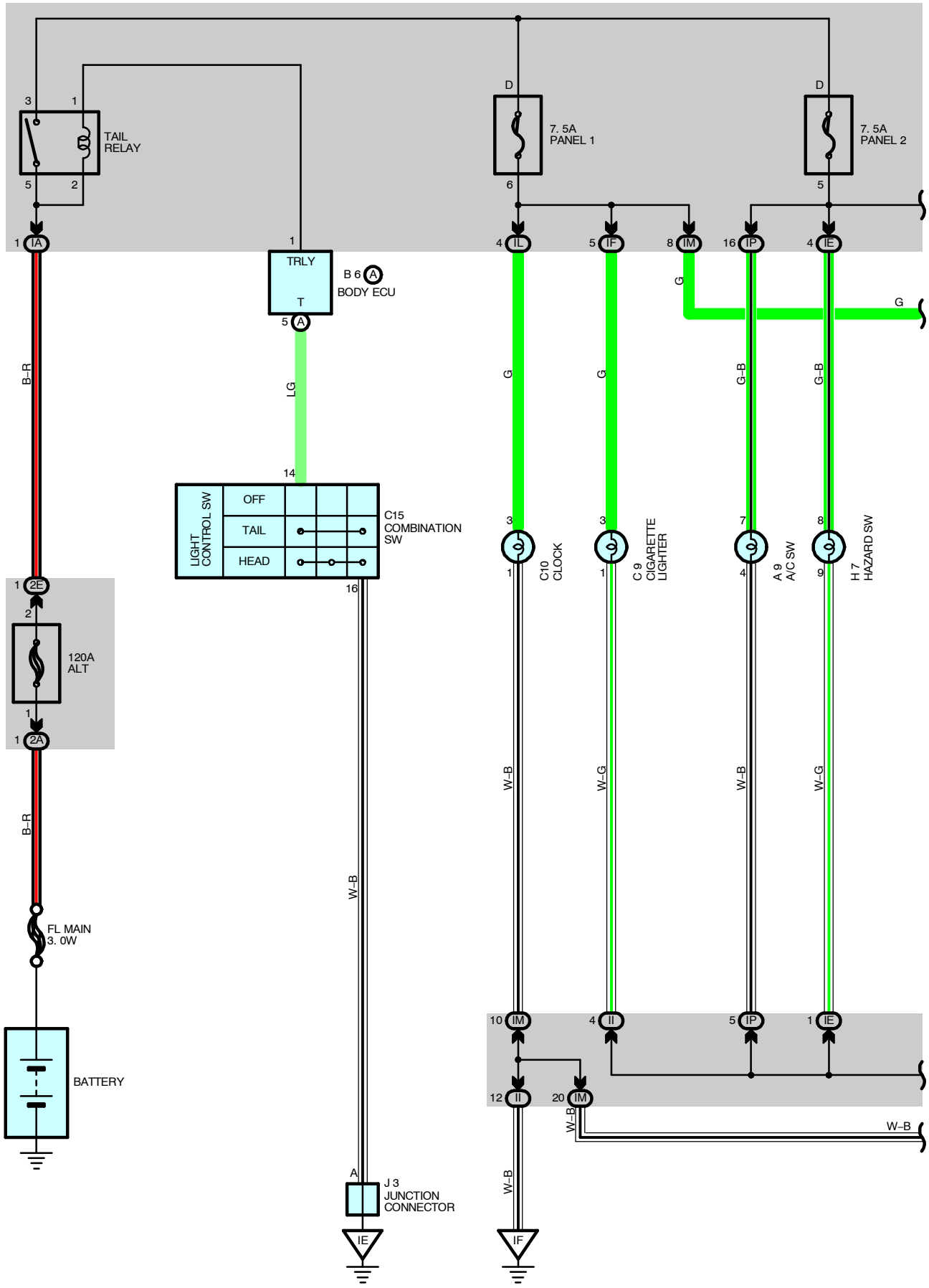
TAIL RELAY
7. 5A PANEL 1
7. 5A PANEL 2
TRLY
B 6 A
BODY ECU
LIGHT CONTROL SW
OFF
TAIL
HEAD
C15 COMBINATION SW
120A ALT
FL MAIN 3. 0W
BATTERY
J 3 JUNCTION CONNECTOR
C10 CLOCK
C 9 CIGARETTE LIGHTER
A 9 A/C SW
H 7 HAZARD SW
B-R
LG
G
G-B
W-B
W-G

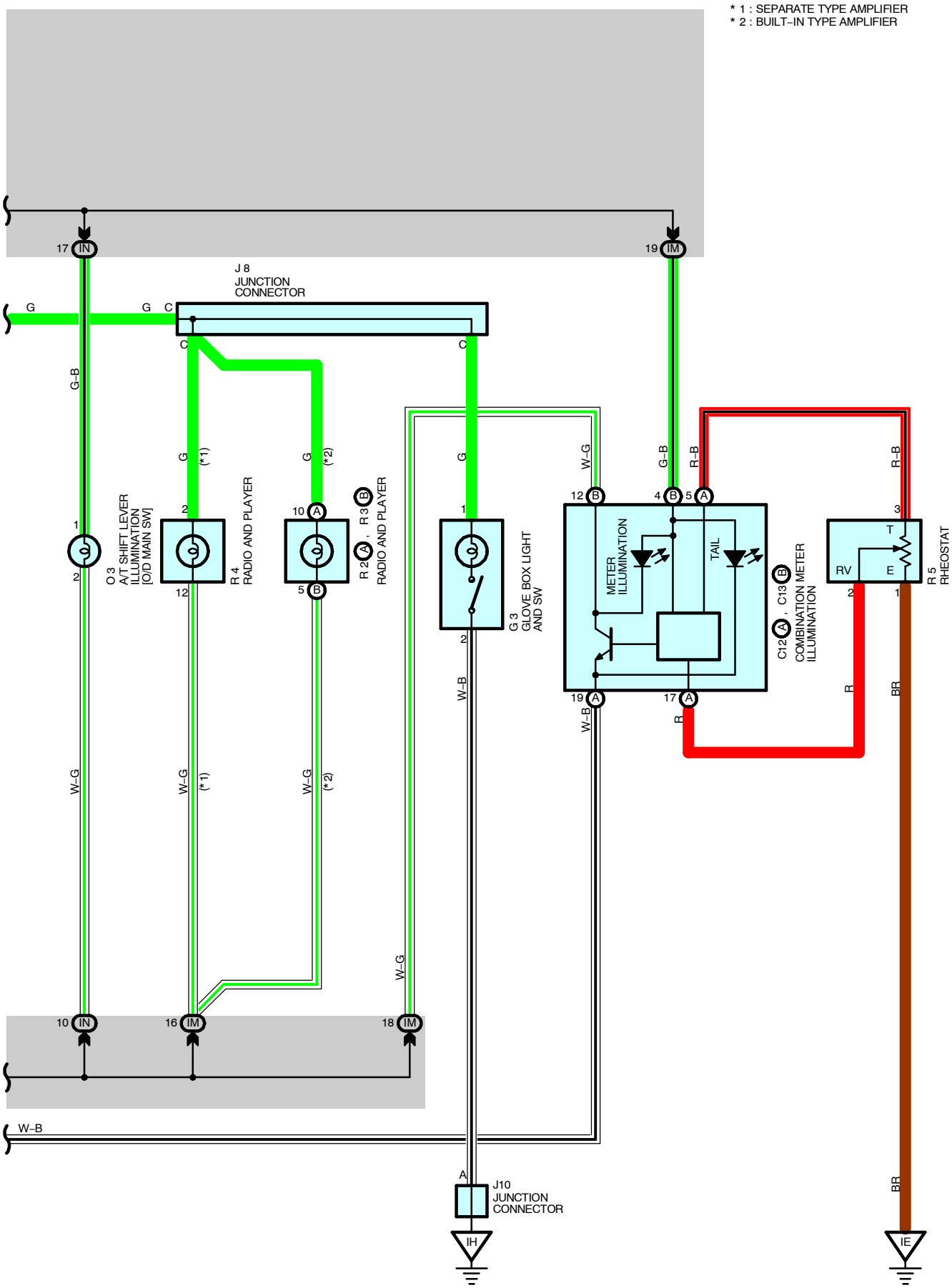
* 1 : SEPARATE TYPE AMPLIFIER
* 2 : BUILT-IN TYPE AMPLIFIER
J 8
JUNCTION
CONNECTOR
O 3
A/T SHIFT LEVER
ILLUMINATION
[O/D MAIN SW]
R 4
RADIO AND PLAYER
R 2 A , R 3 B
RADIO AND PLAYER
G 3
GLOVE BOX LIGHT
AND SW
METER
ILLUMINATION
TAIL
C12 A , C13 B
COMBINATION METER
ILLUMINATION
R 5
RHEOSTAT
RV
T
E
J10
JUNCTION
CONNECTOR
IN
IM
IH
IE
G
G-B
W-G
W-B
R-B
R
BR
(*1)
(*2)

ILLUMINATION

SERVICE HINTS

TAIL RELAY

5–3 : Closed with the light control SW at **TAIL** or **HEAD** position

C15 COMBINATION SW

14–16 : Closed with the light control SW at **TAIL** or **HEAD** position

: PARTS LOCATION

Code		See Page	Code	See Page	Code		See Page
A9		36	C15	36	O3		37
B6	A	36	G3	37	R2	A	37
C9		36	H7	37	R3	B	37
C10		36	J3	37	R4		37
C12	A	36	J8	37	R5		37
C13	B	36	J10	37			

: JUNCTION BLOCK AND WIRE HARNESS CONNECTOR

Code	See Page	Junction Block and Wire Harness (Connector Location)
IA	25	Engine Room Main Wire and Instrument Panel J/B (Instrument Panel Brace RH)
IE	25	Instrument Panel Wire and Instrument Panel J/B (Instrument Panel Brace RH)
IF		
II		
IL		
IM		
IN	25	Floor Wire and Instrument Panel J/B (Instrument Panel Brace RH)
IP	25	Cowl No.2 Wire and Instrument Panel J/B (Instrument Panel Brace RH)
2A	23	Engine Wire and Engine Room J/B (Engine Compartment Left)
2E	23	Engine Room Main Wire and Engine Room J/B (Engine Compartment Left)

: GROUND POINTS

Code	See Page	Ground Points Location
IE	44	Cowl Side Panel LH
IF	44	Instrument Panel Brace RH
IH	44	Cowl Side Panel RH

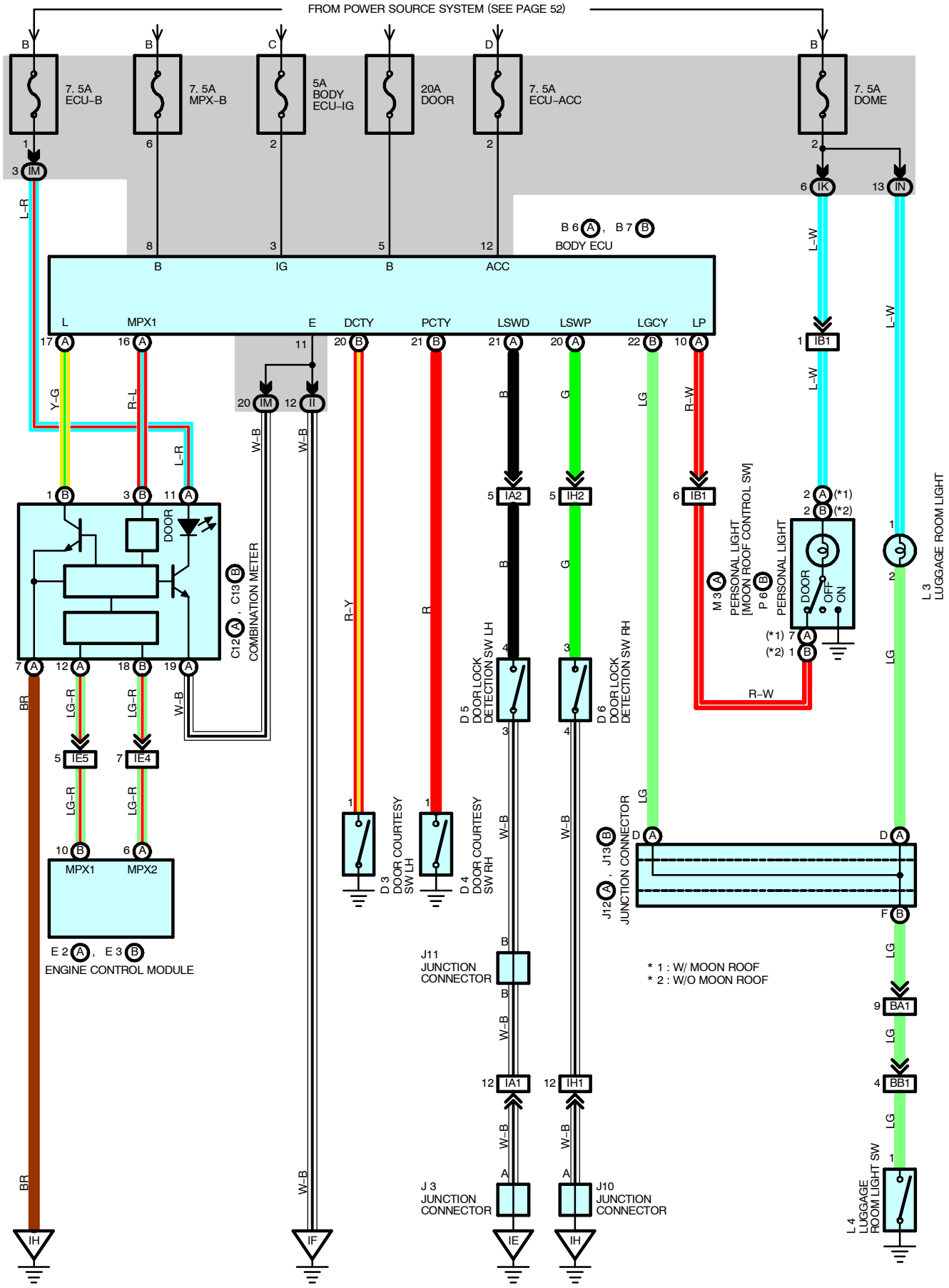
FROM POWER SOURCE SYSTEM (SEE PAGE 52)
7. 5A ECU–B
7. 5A MPX–B
5A BODY ECU–IG
20A DOOR
7. 5A ECU–ACC
7. 5A DOME
B 6 (A), B 7 (B)
BODY ECU
B
IG
B
ACC
L
MPX1
E
DCTY
PCTY
LSWD
LSWP
LGCY
LP
COMBINATION METER
C12 (A), C13 (B)
DOOR
D 3 DOOR COURTESY SW LH
D 4 DOOR COURTESY SW RH
D 5 DOOR LOCK DETECTION SW LH
D 6 DOOR LOCK DETECTION SW RH
M 3 (A) PERSONAL LIGHT [MOON ROOF CONTROL SW]
P 6 (B) PERSONAL LIGHT
DOOR
OFF
ON
L 3 LUGGAGE ROOM LIGHT
J11 JUNCTION CONNECTOR
J 3 JUNCTION CONNECTOR
J10 JUNCTION CONNECTOR
J12 (A), J13 (B) JUNCTION CONNECTOR
MPX1
MPX2
E 2 (A), E 3 (B)
ENGINE CONTROL MODULE
* 1 : W/ MOON ROOF
* 2 : W/O MOON ROOF
L 4 LUGGAGE ROOM LIGHT SW

SYSTEM OUTLINE

ILLUMINATED ENTRY SYSTEM

∗ Lights ON condition
When any door (Driver's side, front passenger's side, or back door etc.) is opened.
∗ Lights OFF condition
If any of the following conditions are met while the dome light is ON, the light fades out and is turned OFF.
When approximately 15 seconds have elapsed after all doors are closed.
When all doors are closed and the driver's side door and the front passenger's side door is locked.
When all the doors are closed with the ignition SW at ACC or ON position.

SERVICE HINTS

D3, D4 DOOR COURTESY SW LH, RH

1–GROUND : Closed with door open

L4 LUGGAGE ROOM LIGHT SW

1–GROUND : Luggage compartment door open

○ : PARTS LOCATION

Code		See Page	Code		See Page	Code		See Page
B6	A	36	D6		38	J11		38
B7	B	36	E2	A	32 (1ZZ–FE)	J12	A	38
C12	A	36			34 (2ZZ–GE)	J13	B	38
C13	B	36	E3	B	32 (1ZZ–FE)	L3		38
D3		38			34 (2ZZ–GE)	L4		38
D4		38	J3		37	M3	A	39
D5		38	J10		37	P6	B	39

: JUNCTION BLOCK AND WIRE HARNESS CONNECTOR

Code	See Page	Junction Block and Wire Harness (Connector Location)
II	25	Instrument Panel Wire and Instrument Panel J/B (Instrument Panel Brace RH)
IK		
IM		
IN	25	Floor Wire and Instrument Panel J/B (Instrument Panel Brace RH)

: CONNECTOR JOINING WIRE HARNESS AND WIRE HARNESS

Code	See Page	Joining Wire Harness and Wire Harness (Connector Location)
IA1	44	Front Door LH Wire and Instrument Panel Wire (Left Kick Panel)
IA2		
IB1	44	Roof Wire and Instrument Panel Wire (left Kick Panel)
IE4	44	Engine Room Main Wire and Instrument Panel Wire (Instrument Panel Brace LH)
IE5		
IH1	46	Front Door RH Wire and Instrument Panel Wire (Right Kick Panel)
IH2		
BA1	48	Back Door No.1 Wire and Floor Wire (Quarter Panel LH)
BB1	48	Back Door No.2 Wire and Back Door No.1 Wire (Back Door Upper Left)

▽ : GROUND POINTS

Code	See Page	Ground Points Location
IE	44	Cowl Side Panel LH
IF	44	Instrument Panel Brace RH
IH	44	Cowl Side Panel RH

BACK–UP LIGHT

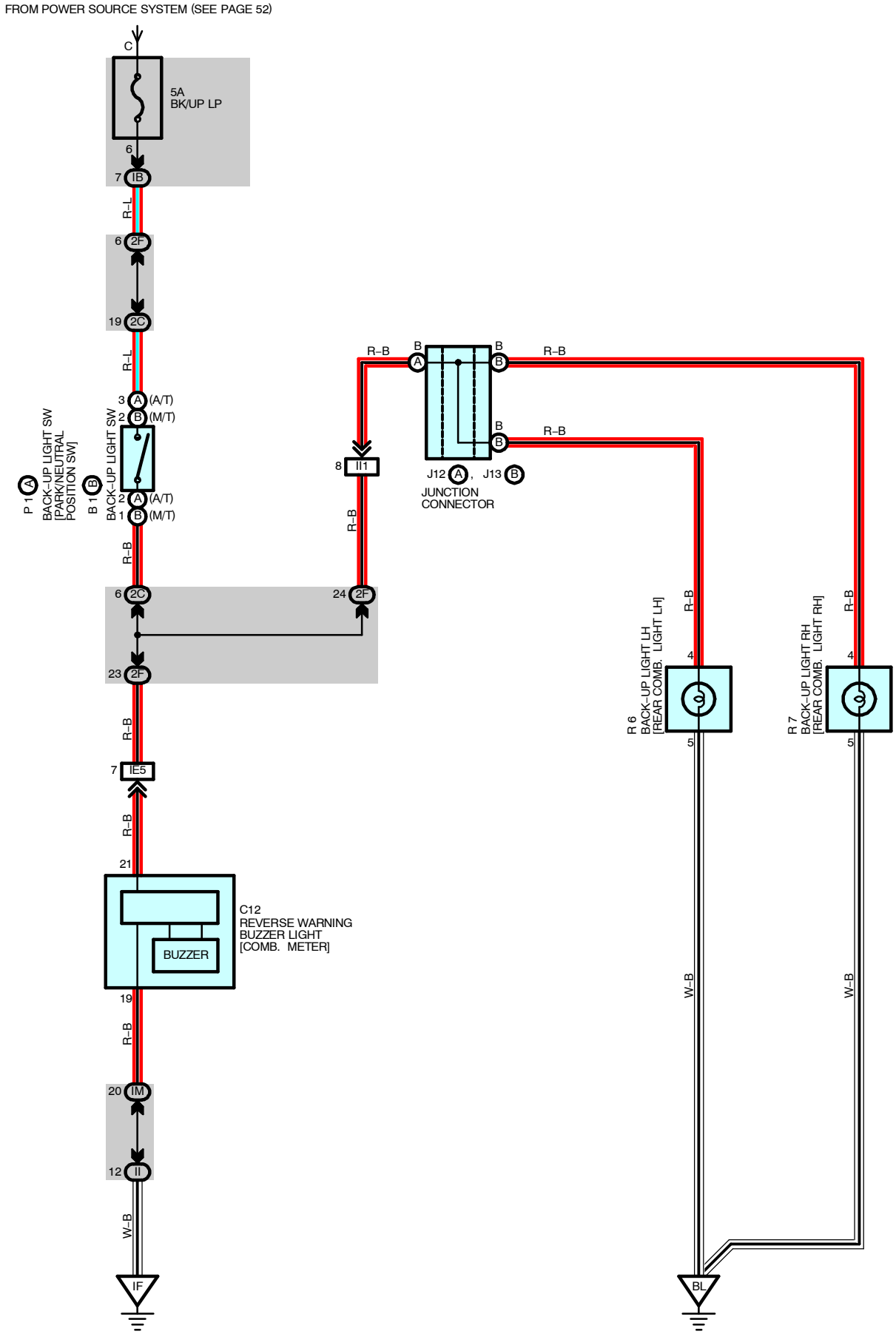

SERVICE HINTS

P1 BACK–UP LIGHT SW [PARK/NEUTRAL POSITION SW] (A/T)

3–2 : Closed with the shift lever at **R** position

B1 BACK–UP LIGHT SW (M/T)

2–1 : Closed with the shift lever in **R** position

: PARTS LOCATION

Code		See Page	Code		See Page	Code		See Page
B1	B	32 (1ZZ–FE)	J12	A	38	P1	A	35 (2ZZ–GE)
		34 (2ZZ–GE)	J13	B	38	R6		39
C12		36	P1	A	33 (1ZZ–FE)	R7		39

: JUNCTION BLOCK AND WIRE HARNESS CONNECTOR

Code	See Page	Junction Block and Wire Harness (Connector Location)
IB	25	Engine Room Main Wire and Instrument Panel J/B (Instrument Panel Brace RH)
II	25	Instrument Panel Wire and Instrument Panel J/B (Instrument Panel Brace RH)
IM		
2C	23	Engine Wire and Engine Room J/B (Engine Compartment Left)
2F	23	Engine Room Main Wire and Engine Room J/B (Engine Compartment Left)

: CONNECTOR JOINING WIRE HARNESS AND WIRE HARNESS

Code	See Page	Joining Wire Harness and Wire Harness (Connector Location)
IE5	44	Engine Room Main Wire and Instrument Panel Wire (Instrument Panel Brace LH)
II1	46	Engine Room Main Wire and Floor Wire (Instrument Panel Brace LH)

: GROUND POINTS

Code	See Page	Ground Points Location
IF	44	Instrument Panel Brace RH
BL	48	Back Panel Center

STOP LIGHT

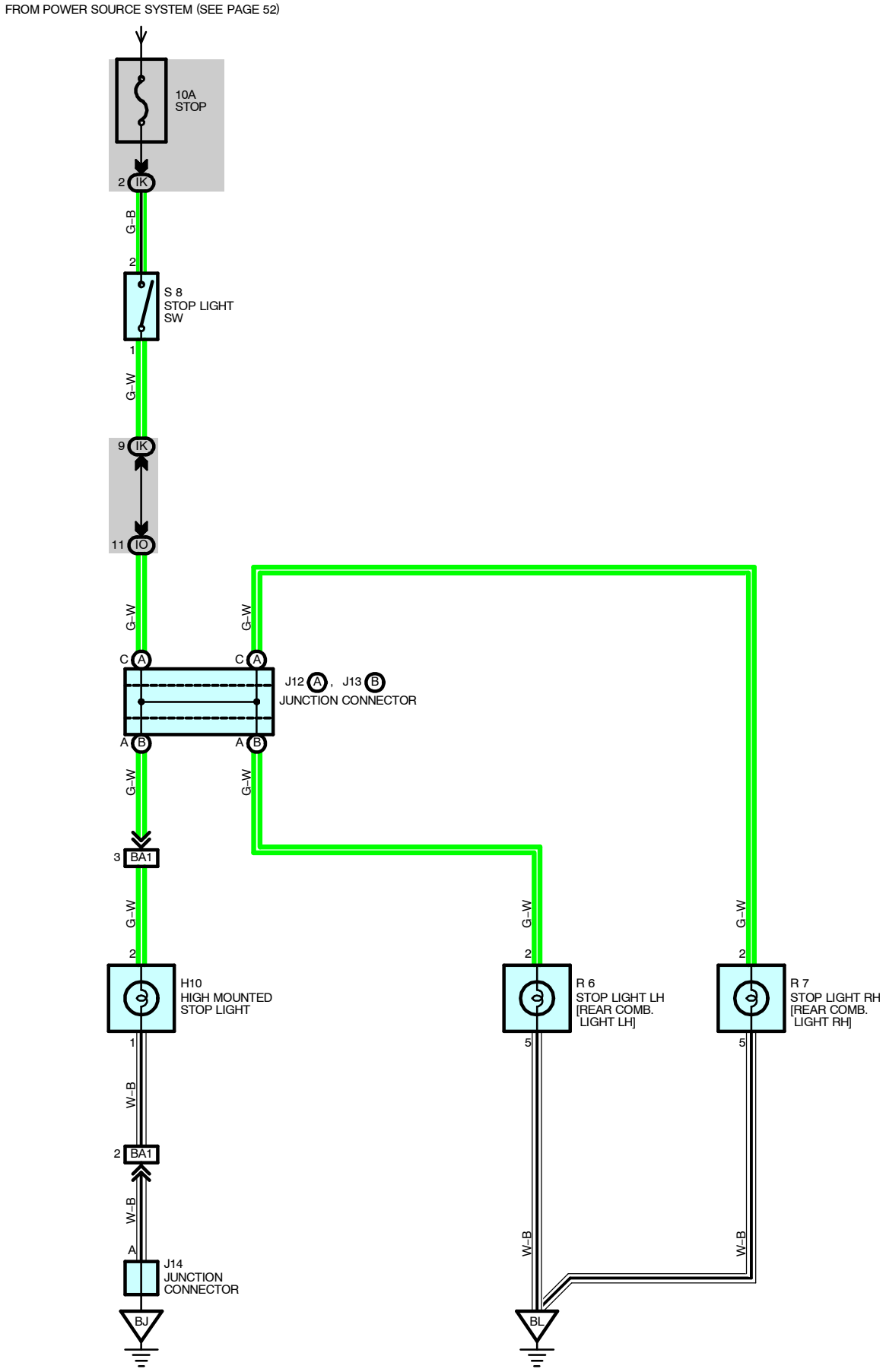
FROM POWER SOURCE SYSTEM (SEE PAGE 52)
10A
STOP
2 IK
G–B
2
S 8
STOP LIGHT
SW
1
G–W
9 IK
11 IO
G–W
G–W
C A
C A
J12 A , J13 B
JUNCTION CONNECTOR
A B
A B
G–W
G–W
3 BA1
G–W
G–W
G–W
2
2
2
H10
HIGH MOUNTED
STOP LIGHT
R 6
STOP LIGHT LH
[REAR COMB.
LIGHT LH]
R 7
STOP LIGHT RH
[REAR COMB.
LIGHT RH]
1
5
5
W–B
2 BA1
W–B
W–B
W–B
A
J14
JUNCTION
CONNECTOR
BJ
BL

SERVICE HINTS

S8 STOP LIGHT SW

2–1 : Closed with the brake pedal depressed

: PARTS LOCATION

Code		See Page	Code	See Page	Code	See Page
H10		38	J14	38	S8	37
J12	A	38	R6	39		
J13	B	38	R7	39		

: JUNCTION BLOCK AND WIRE HARNESS CONNECTOR

Code	See Page	Junction Block and Wire Harness (Connector Location)
IK	25	Instrument Panel Wire and Instrument Panel J/B (Instrument Panel Brace RH)
IO	25	Floor Wire and Instrument Panel J/B (Instrument Panel Brace RH)

: CONNECTOR JOINING WIRE HARNESS AND WIRE HARNESS

Code	See Page	Joining Wire Harness and Wire Harness (Connector Location)
BA1	48	Back Door No.1 Wire and Floor Wire (Quarter Panel LH)

: GROUND POINTS

Code	See Page	Ground Points Location
BJ	48	Luggage Room Left
BL	48	Back Panel Center

TURN SIGNAL AND HAZARD WARNING LIGHT

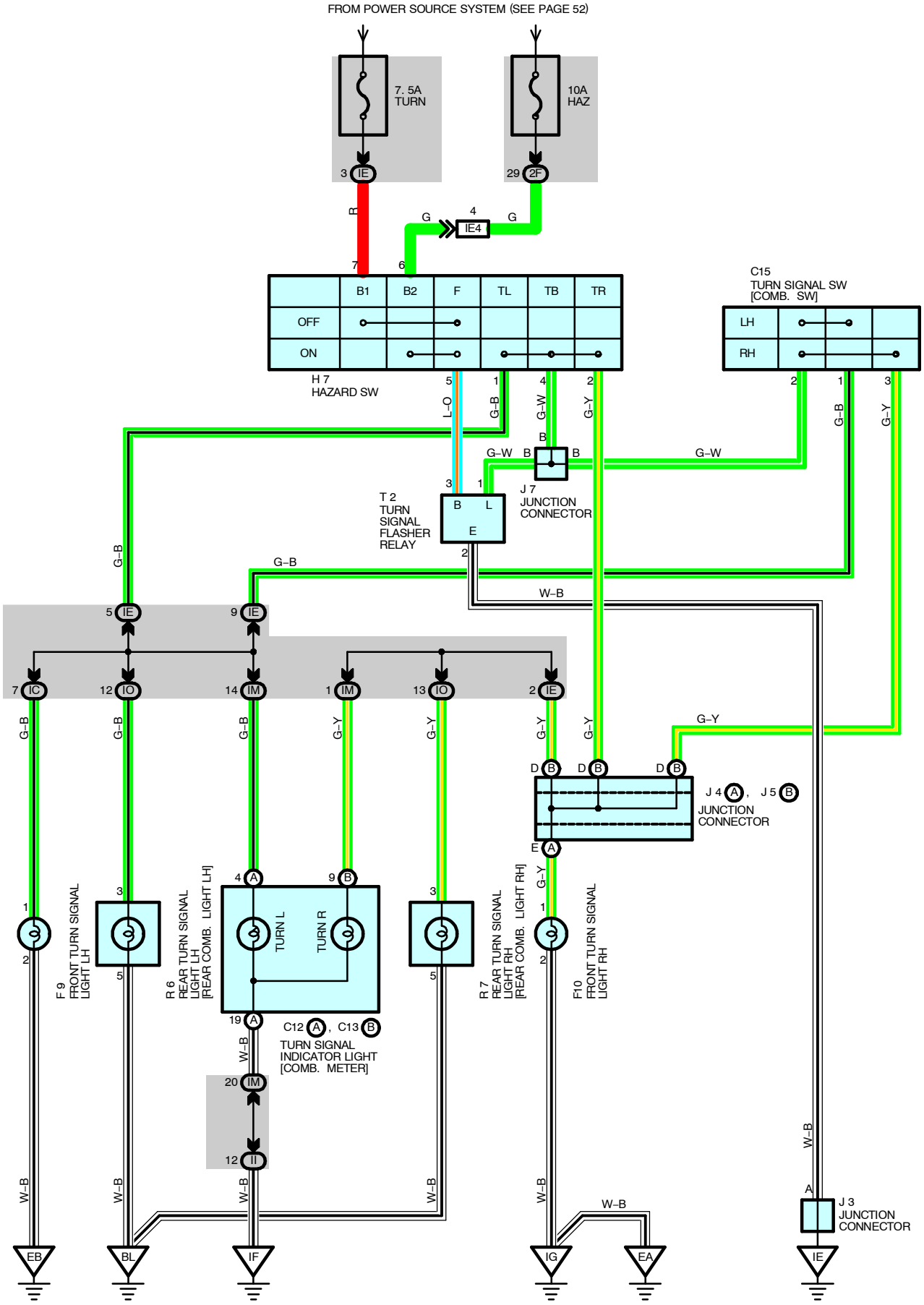

SERVICE HINTS

T2 TURN SIGNAL FLASHER RELAY

3–GROUND : Approx. **12** volts with the ignition SW on or the hazard SW on
1–GROUND : Changes from **12** to **0** volts with the ignition SW on and the turn signal SW **LH** or **RH** position, and with the hazard SW on
2–GROUND : Always continuity

: PARTS LOCATION

Code		See Page	Code	See Page	Code		See Page
C12	A	36	F10	32 (1ZZ–FE)	J5	B	37
C13	B	36		34 (2ZZ–GE)	J7		37
C15		36	H7	37	R6		39
F9		32 (1ZZ–FE)	J3	37	R7		39
		34 (2ZZ–GE)	J4	A 37	T2		37

: JUNCTION BLOCK AND WIRE HARNESS CONNECTOR

Code	See Page	Junction Block and Wire Harness (Connector Location)
IC	25	Engine Room Main Wire and Instrument Panel J/B (Instrument Panel Brace RH)
IE	25	Instrument Panel Wire and Instrument Panel J/B (Instrument Panel Brace RH)
II		
IM		
IO	25	Floor Wire and Instrument Panel J/B (Instrument Panel Brace RH)
2F	23	Engine Room Main Wire and Engine Room J/B (Engine Compartment Left)

: CONNECTOR JOINING WIRE HARNESS AND WIRE HARNESS

Code	See Page	Joining Wire Harness and Wire Harness (Connector Location)
IE4	44	Engine Room Main Wire and Instrument Panel Wire (Instrument Panel Brace LH)

: GROUND POINTS

Code	See Page	Ground Points Location
EA	40 (1ZZ–FE)	Front Right Fender
	42 (2ZZ–GE)	
EB	40 (1ZZ–FE)	Front Left Fender
	42 (2ZZ–GE)	
IE	44	Cowl Side Panel LH
IF	44	Instrument Panel Brace RH
IG	44	Cowl Side Panel RH
BL	48	Back Panel Center

LIGHT REMINDER BUZZER

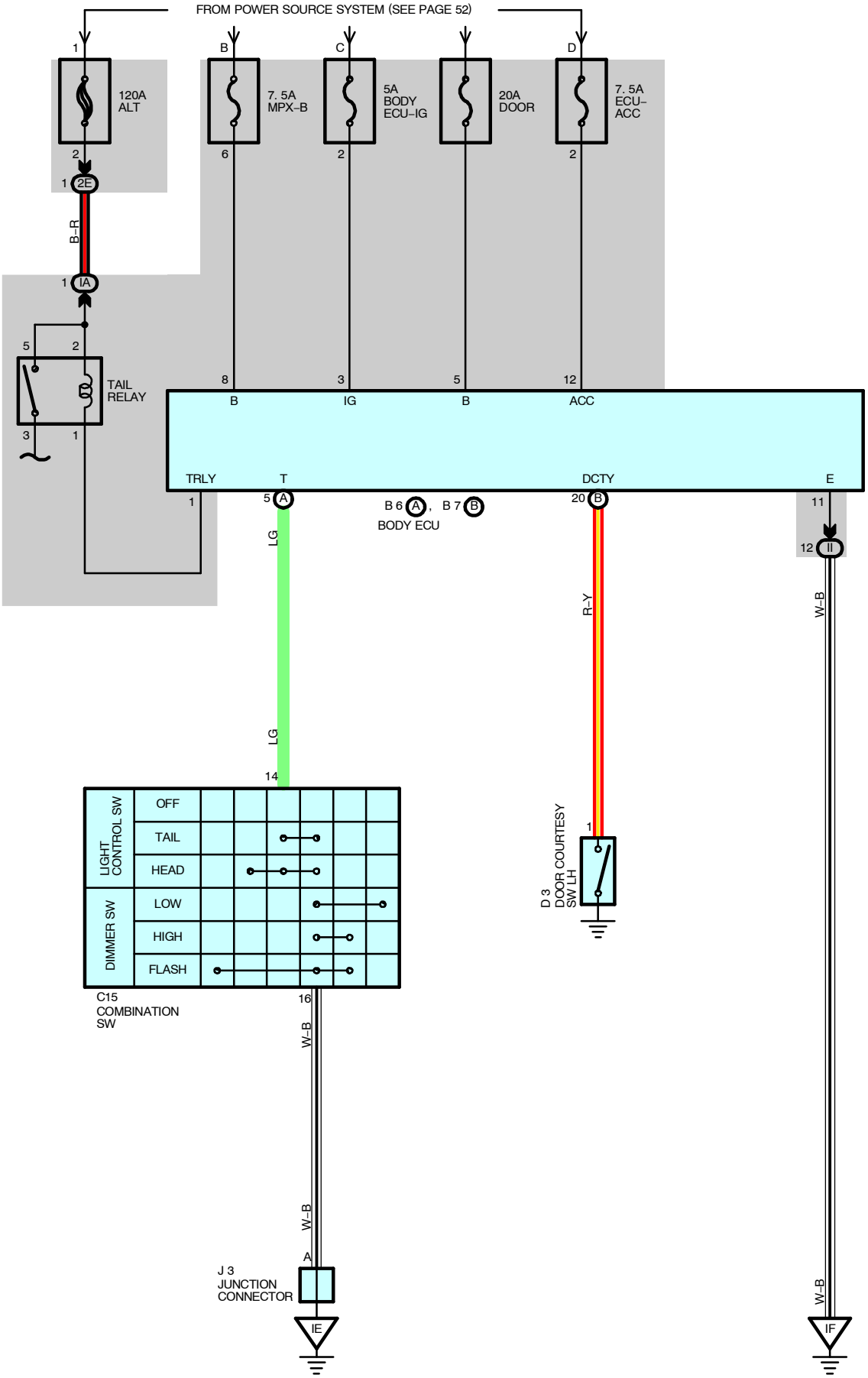

SYSTEM OUTLINE

When the ignition SW is OFF and the driver's side door is opened (Door courtesy SW ON) and the light control SW is at TAIL or HEAD position, the light reminder buzzer comes ON.

SERVICE HINTS

D3 DOOR COURTESY SW LH

1–GROUND : Driver's door open

: PARTS LOCATION

Code		See Page	Code	See Page	Code	See Page
B6	A	36	C15	36	J3	37
B7	B	36	D3	38		

: JUNCTION BLOCK AND WIRE HARNESS CONNECTOR

Code	See Page	Junction Block and Wire Harness (Connector Location)
IA	25	Engine Room Main Wire and Instrument Panel J/B (Instrument Panel Brace RH)
II	25	Instrument Panel Wire and Instrument Panel J/B (Instrument Panel Brace RH)
2E	23	Engine Room Main Wire and Engine Room J/B (Engine Compartment Left)

: GROUND POINTS

Code	See Page	Ground Points Location
IE	44	Cowl Side Panel LH
IF	44	Instrument Panel Brace RH

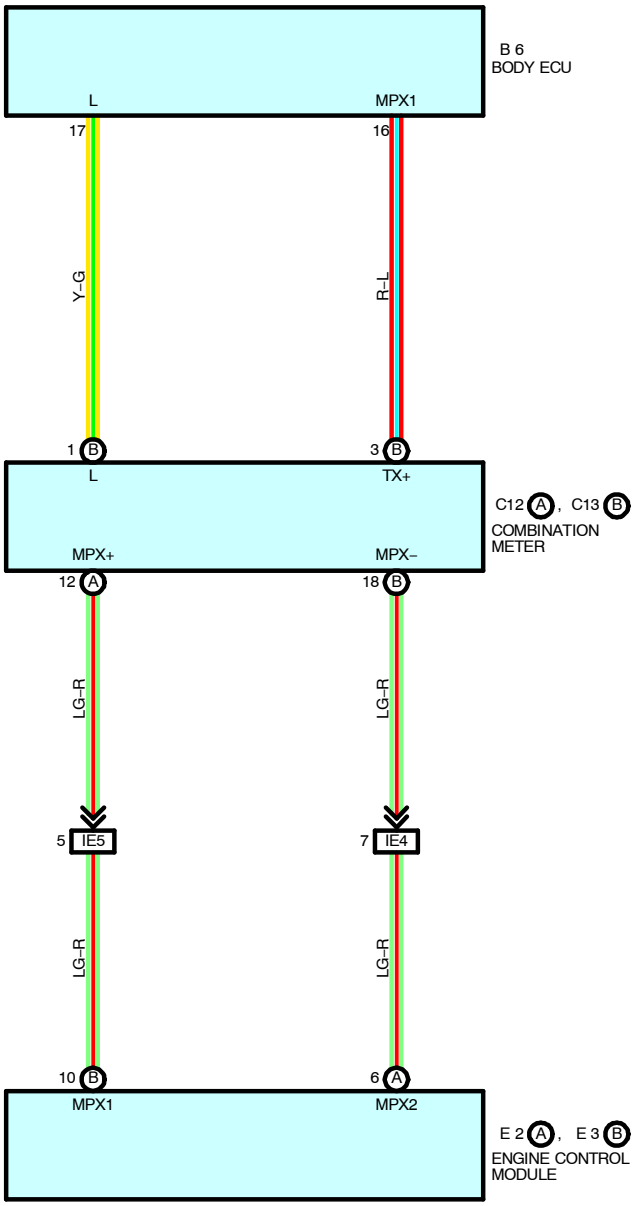
B 6
BODY ECU
L
MPX1
17
16
Y-G
R-L
1 B
3 B
L
TX+
C12 A, C13 B
COMBINATION METER
MPX+
MPX–
12 A
18 B
LG-R
LG-R
5 IE5
7 IE4
LG-R
LG-R
10 B
6 A
MPX1
MPX2
E 2 A, E 3 B
ENGINE CONTROL MODULE

MULTIPLEX COMMUNICATION SYSTEM INCLUDES FOLLOWING SYSTEMS

- ∗ **DOOR LOCK CONTROL**
- ∗ **HEADLIGHT**
- ∗ **INTERIOR LIGHT**
- ∗ **KEY REMINDER AND SEAT BELT WARNING**
- ∗ **LIGHT REMINDER BUZZER**
- ∗ **MOON ROOF**
- ∗ **POWER WINDOW**
- ∗ **WIRELESS DOOR LOCK CONTROL**

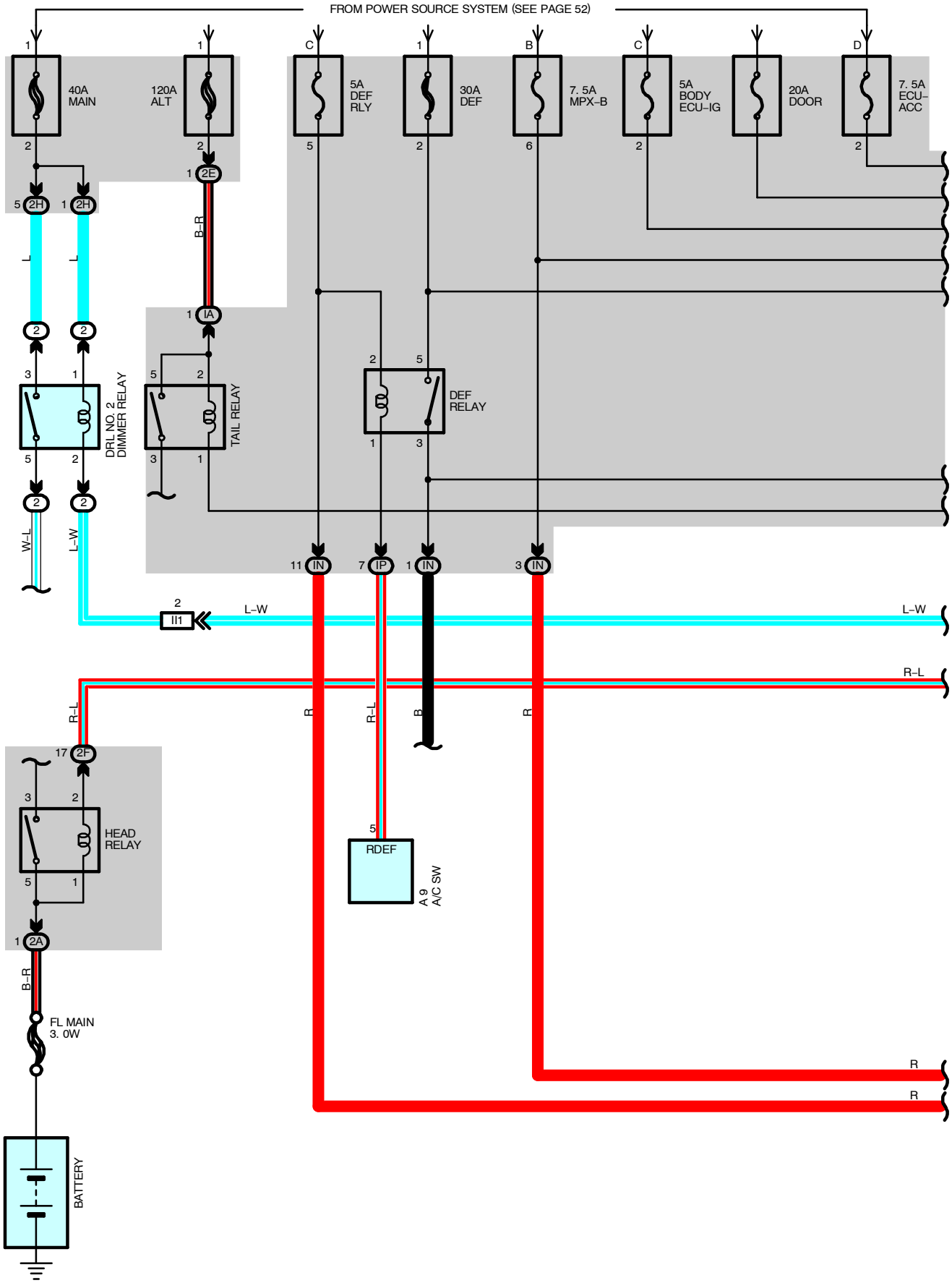
FROM POWER SOURCE SYSTEM (SEE PAGE 52)
40A MAIN
120A ALT
5A DEF RLY
30A DEF
7. 5A MPX–B
5A BODY ECU–IG
20A DOOR
7. 5A ECU–ACC
2H
2E
IA
B–R
L
W–L
L–W
DRL NO. 2 DIMMER RELAY
TAIL RELAY
DEF RELAY
IN
IP
II1
R–L
R
HEAD RELAY
2F
2A
RDEF
A 9 A/C SW
FL MAIN 3. 0W
BATTERY

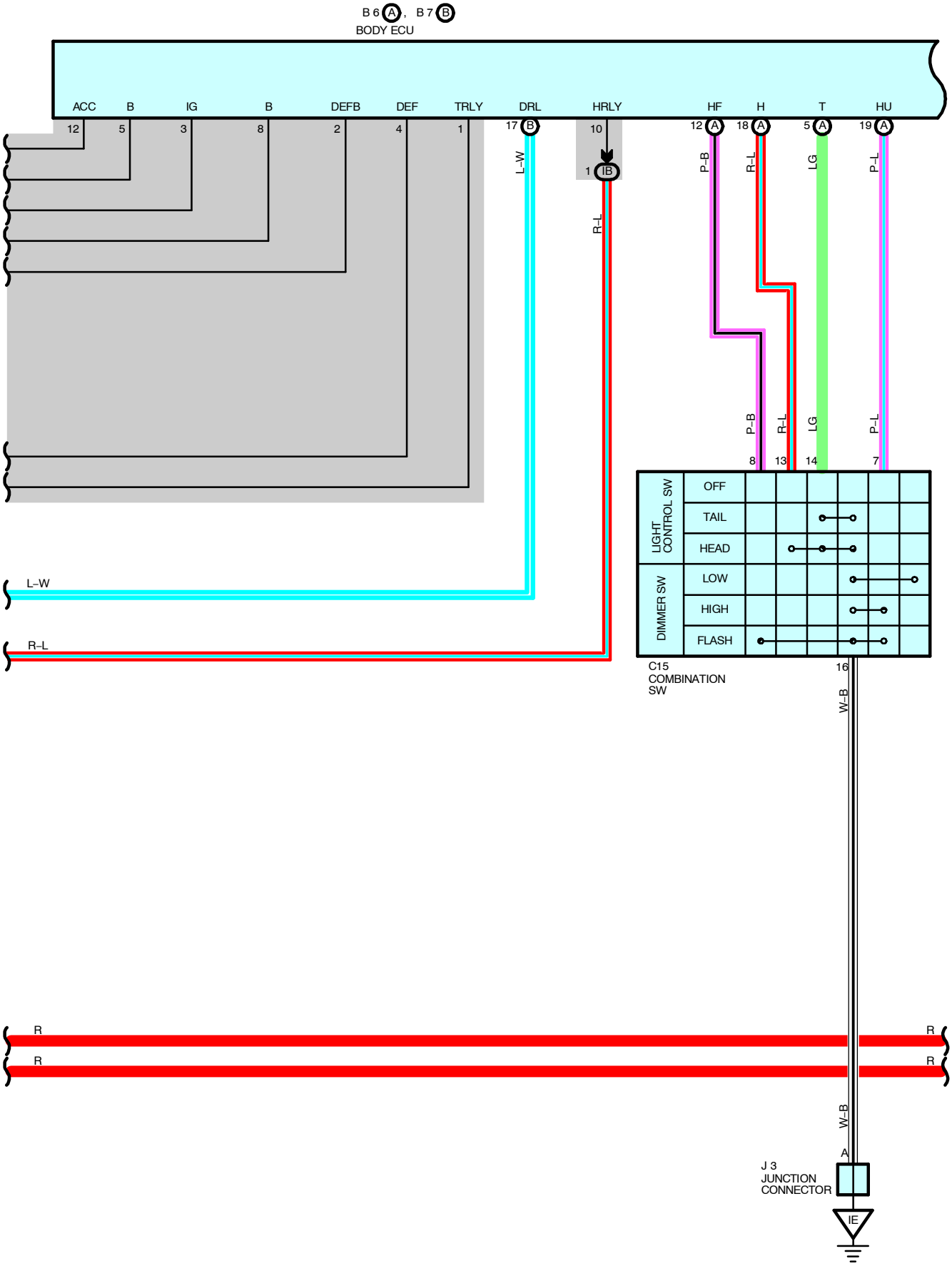
B 6 A, B 7 B
BODY ECU
ACC
B
IG
B
DEFB
DEF
TRLY
DRL
HRLY
HF
H
T
HU
12
5
3
8
2
4
1
17 B
10
1 IB
12 A
18 A
5 A
19 A
L–W
R–L
P–B
R–L
LG
P–L
P–B
R–L
LG
P–L
8
13
14
7
LIGHT CONTROL SW
OFF
TAIL
HEAD
DIMMER SW
LOW
HIGH
FLASH
C15
COMBINATION
SW
16
W–B
L–W
R–L
R
R
R
R
W–B
A
J 3
JUNCTION
CONNECTOR
IE

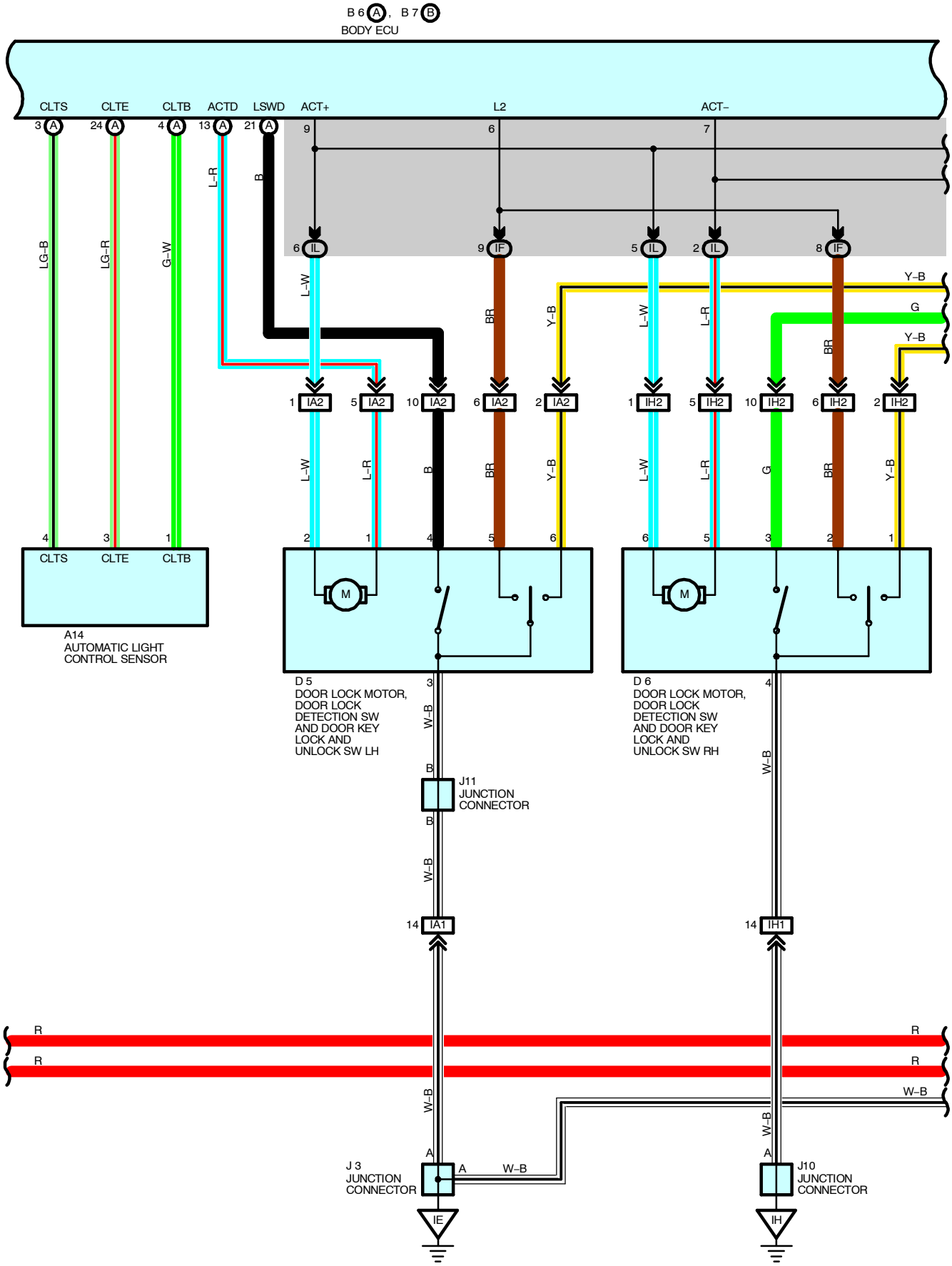
B 6 A, B 7 B
BODY ECU
CLTS
CLTE
CLTB
ACTD
LSWD
ACT+
L2
ACT–
LG–B
LG–R
G–W
L–R
B
L–W
BR
Y–B
G
IL
IF
IA2
IH2
IA1
IH1
A14
AUTOMATIC LIGHT
CONTROL SENSOR
D 5
DOOR LOCK MOTOR,
DOOR LOCK
DETECTION SW
AND DOOR KEY
LOCK AND
UNLOCK SW LH
D 6
DOOR LOCK MOTOR,
DOOR LOCK
DETECTION SW
AND DOOR KEY
LOCK AND
UNLOCK SW RH
W–B
J11
JUNCTION
CONNECTOR
R
J 3
JUNCTION
CONNECTOR
J10
JUNCTION
CONNECTOR
IE
IH

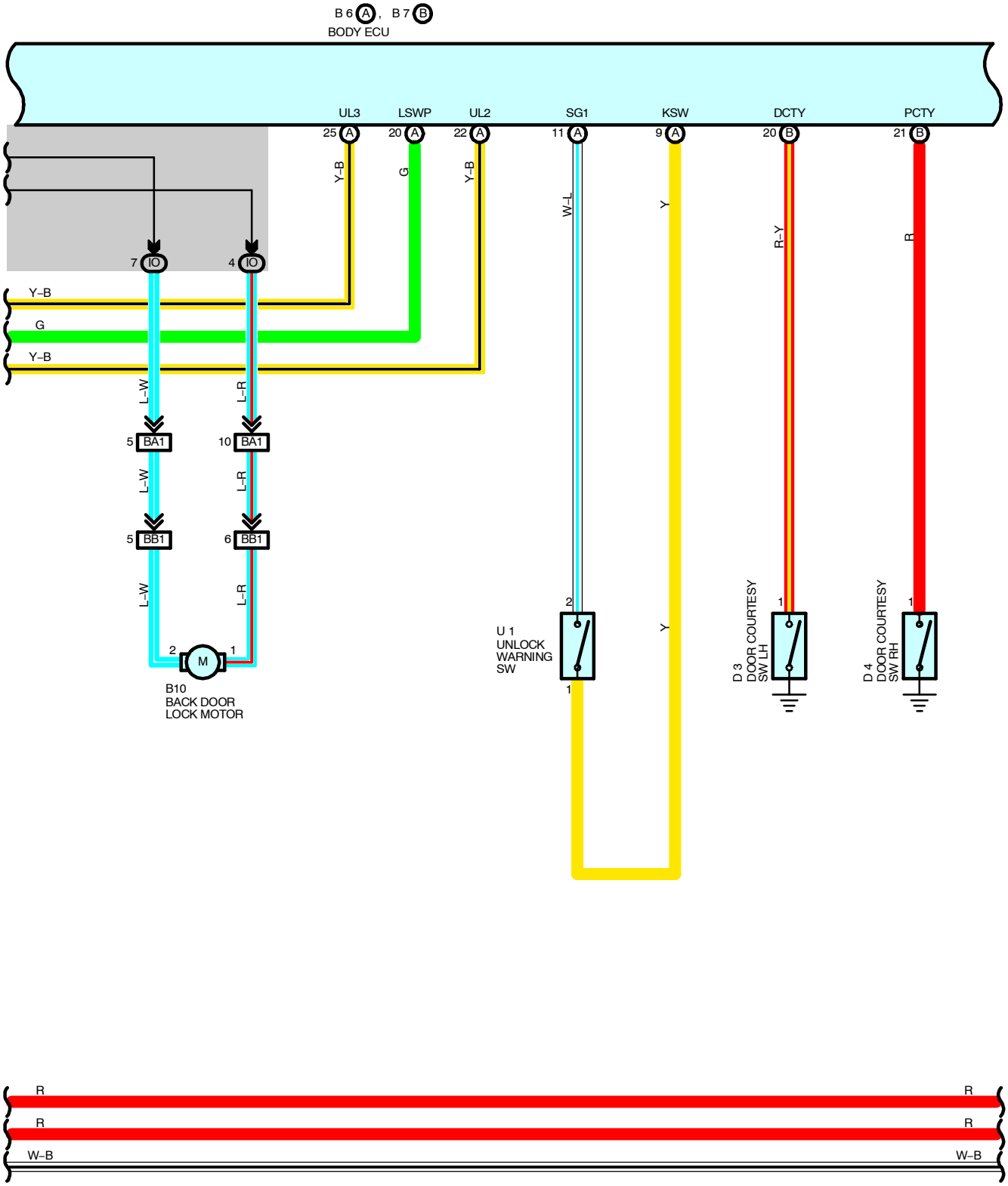
B 6 A , B 7 B
BODY ECU
UL3
LSWP
UL2
SG1
KSW
DCTY
PCTY
25 A
20 A
22 A
11 A
9 A
20 B
21 B
Y-B
G
Y-B
W-L
Y
R-Y
R
7 IO
4 IO
Y-B
G
Y-B
L-W
L-R
5 BA1
10 BA1
L-W
L-R
5 BB1
6 BB1
L-W
L-R
2
1
M
B10
BACK DOOR
LOCK MOTOR
2
1
U 1
UNLOCK
WARNING
SW
Y
1
D 3
DOOR COURTESY
SW LH
D 4
DOOR COURTESY
SW RH
R
R
W-B

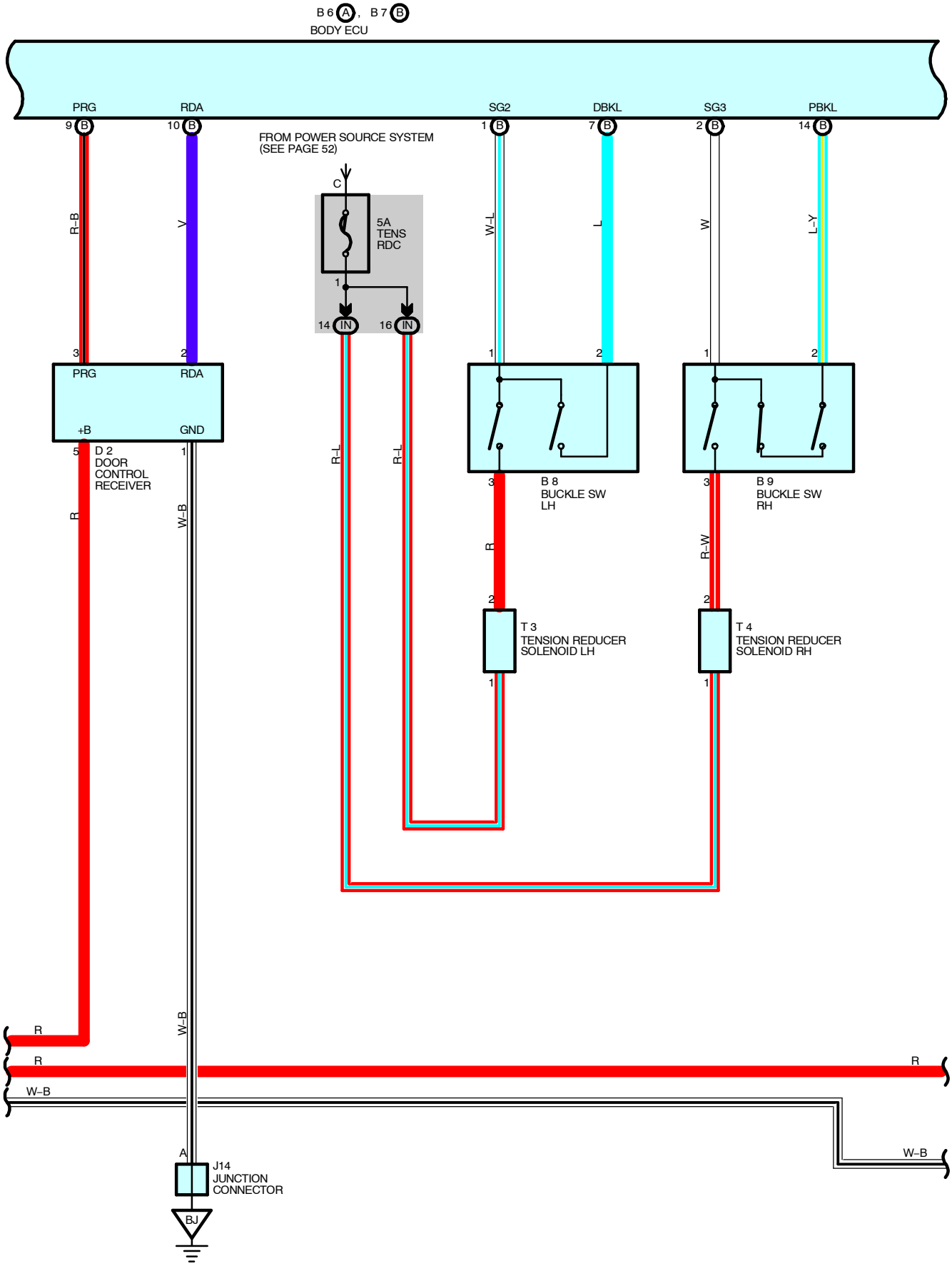
B 6 A, B 7 B
BODY ECU
PRG
RDA
SG2
DBKL
SG3
PBKL
9 B
10 B
1 B
7 B
2 B
14 B
FROM POWER SOURCE SYSTEM
(SEE PAGE 52)
C
5A
TENS
RDC
1
14 IN
16 IN
R–B
V
W–L
L
W
L–Y
3
2
1
2
1
2
PRG
RDA
+B
GND
5
1
D 2
DOOR
CONTROL
RECEIVER
R–L
R–L
3
B 8
BUCKLE SW
LH
3
B 9
BUCKLE SW
RH
R
W–B
R
R–W
2
2
T 3
TENSION REDUCER
SOLENOID LH
T 4
TENSION REDUCER
SOLENOID RH
1
1
R
W–B
R
R
W–B
W–B
A
J14
JUNCTION
CONNECTOR
BJ

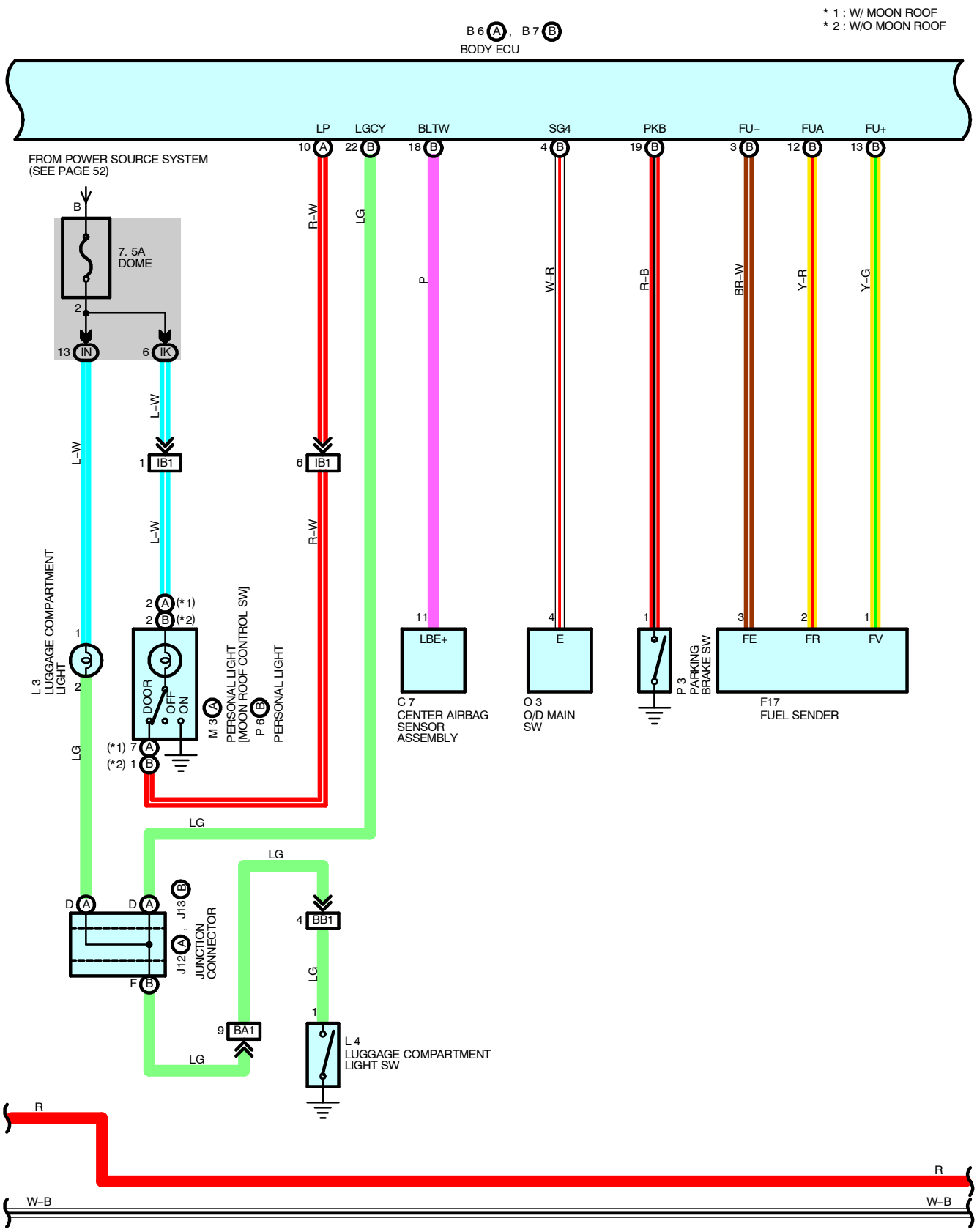
* 1 : W/ MOON ROOF
* 2 : W/O MOON ROOF
B 6 A , B 7 B
BODY ECU
LP
LGCY
BLTW
SG4
PKB
FU–
FUA
FU+
10 A
22 B
18 B
4 B
19 B
3 B
12 B
13 B
FROM POWER SOURCE SYSTEM
(SEE PAGE 52)
B
7. 5A
DOME
2
13 IN
6 IK
R–W
LG
P
W–R
R–B
BR–W
Y–R
Y–G
L–W
1 IB1
6 IB1
L–W
R–W
2 A (*1)
2 B (*2)
1
2
L 3
LUGGAGE COMPARTMENT
LIGHT
DOOR
OFF
ON
M 3 A
PERSONAL LIGHT
[MOON ROOF CONTROL SW]
P 6 B
PERSONAL LIGHT
(*1) 7 A
(*2) 1 B
LG
11
LBE+
C 7
CENTER AIRBAG
SENSOR
ASSEMBLY
4
E
O 3
O/D MAIN
SW
1
P 3
PARKING
BRAKE SW
3
2
1
FE
FR
FV
F17
FUEL SENDER
LG
LG
D A
D A
J13 B
J12 A , J13 B
JUNCTION
CONNECTOR
F B
4 BB1
LG
1
9 BA1
LG
L 4
LUGGAGE COMPARTMENT
LIGHT SW
R
R
W–B
W–B

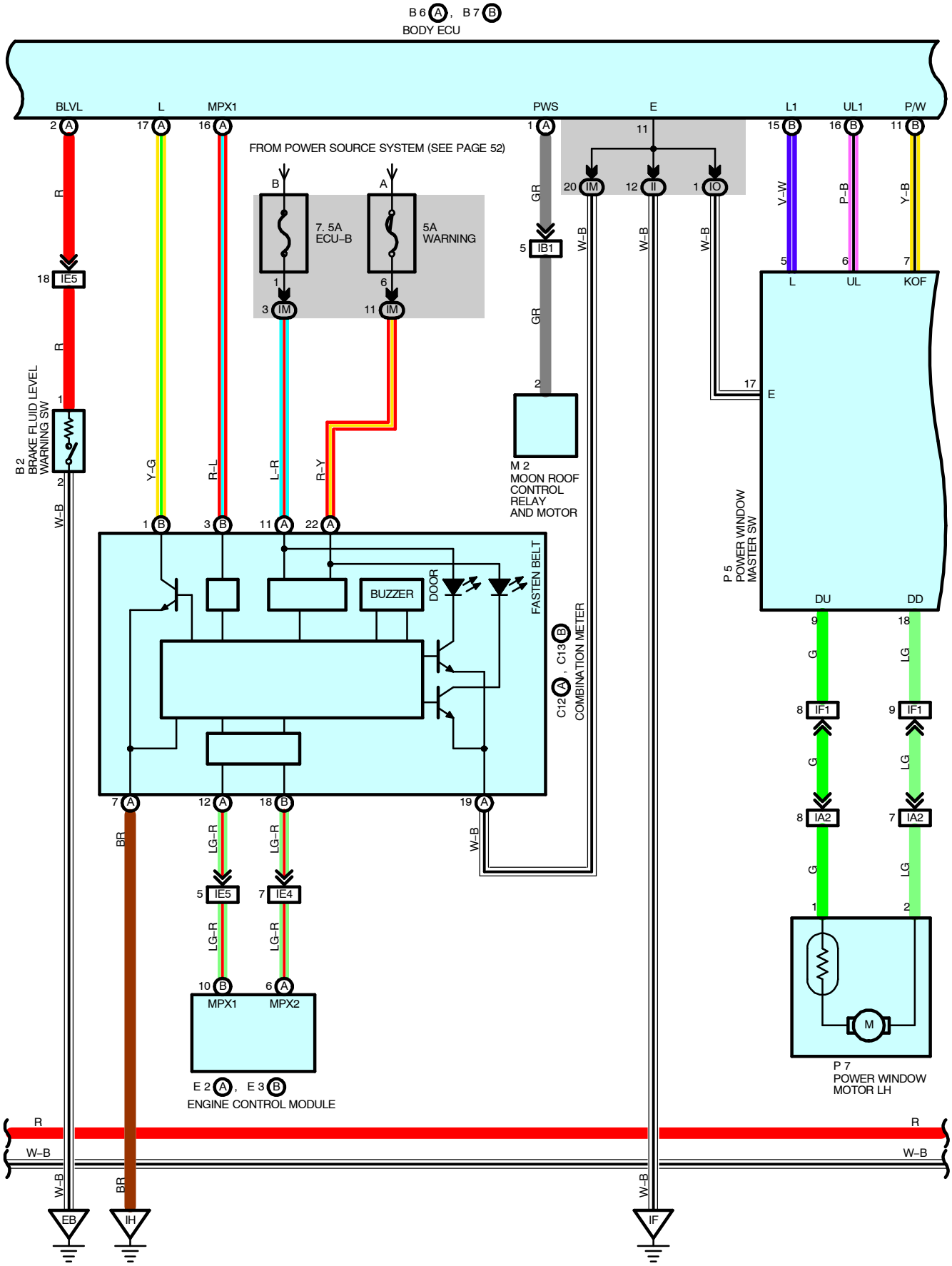
B 6 A , B 7 B
BODY ECU
BLVL
L
MPX1
PWS
E
L1
UL1
P/W
FROM POWER SOURCE SYSTEM (SEE PAGE 52)
7. 5A
ECU–B
5A
WARNING
IE5
IB1
IM
IO
B 2
BRAKE FLUID LEVEL
WARNING SW
M 2
MOON ROOF
CONTROL
RELAY
AND MOTOR
P 5
POWER WINDOW
MASTER SW
BUZZER
DOOR
FASTEN BELT
C12 A , C13 B
COMBINATION METER
IF1
IA2
P 7
POWER WINDOW
MOTOR LH
IE4
MPX2
E 2 A , E 3 B
ENGINE CONTROL MODULE
EB
IH
IF

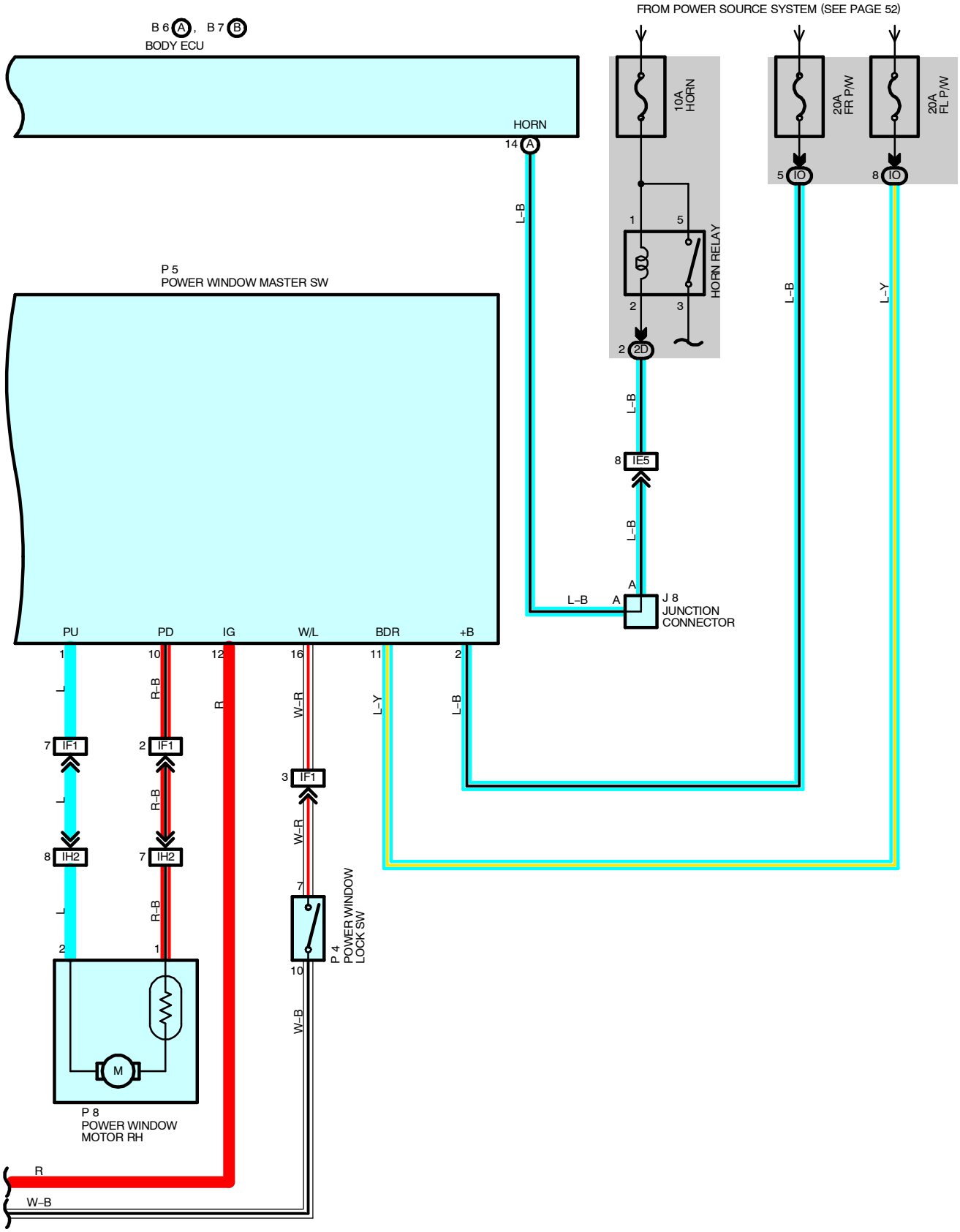
FROM POWER SOURCE SYSTEM (SEE PAGE 52)
B 6 A, B 7 B
BODY ECU
HORN
14 A
10A HORN
20A FR P/W
20A FL P/W
5 IO
8 IO
L-B
1
5
2
3
HORN RELAY
2 2D
L-B
8 IE5
L-B
A
L-B
A
J 8
JUNCTION CONNECTOR
L-B
L-Y
P 5
POWER WINDOW MASTER SW
PU
PD
IG
W/L
BDR
+B
1
10
12
16
11
2
L
R-B
R
W-R
L-Y
L-B
7 IF1
2 IF1
3 IF1
L
R-B
W-R
8 IH2
7 IH2
L
R-B
7
2
1
10
P 4
POWER WINDOW LOCK SW
W-B
M
P 8
POWER WINDOW MOTOR RH
R
W-B

SERVICE HINTS

BODY ECU

3–GROUND : Approx. **12** volts with ignition SW at **ON** or **ST** position
8–GROUND : Always approx. **12** volts
5–GROUND : Always approx. **12** volts
11–GROUND : Always continuity
12–GROUND : Approx. **12** volts with ignition SW at **ACC** or **ON** position

: PARTS LOCATION

Code	See Page	Code	See Page	Code	See Page
A9	36	D4	38	L3	38
A14	36	D5	38	L4	38
B2	32 (1ZZ–FE)	D6	38	M2	39
	34 (2ZZ–GE)	E2 A	32 (1ZZ–FE)	M3 A	39
B6 A	36		34 (2ZZ–GE)	O3	37
B7 B	36	E3 B	32 (1ZZ–FE)	P3	37
B8	36		34 (2ZZ–GE)	P4	37
B9	36	F17	38	P5	37
B10	38	J3	37	P6 B	39
C7	36	J8	37	P7	39
C12 A	36	J10	37	P8	39
C13 B	36	J11	38	T3	39
C15	36	J12 A	38	T4	39
D2	38	J13 B	38	U1	37
D3	38	J14	38		

: RELAY BLOCKS

Code	See Page	Relay Blocks (Relay Block Location)
2	27	Engine Room R/B No.2 (Engine Compartment Left)

: JUNCTION BLOCK AND WIRE HARNESS CONNECTOR

Code	See Page	Junction Block and Wire Harness (Connector Location)
IA	25	Engine Room Main Wire and Instrument Panel J/B (Instrument Panel Brace RH)
IB		
IF	25	Instrument Panel Wire and Instrument Panel J/B (Instrument Panel Brace RH)
II		
IK		
IL		
IM		
IN	25	Floor Wire and Instrument Panel J/B (Instrument Panel Brace RH)
IO		
IP	25	Cowl No.2 Wire and Instrument Panel J/B (Instrument Panel Brace RH)
2A	23	Engine Wire and Engine Room J/B (Engine Compartment Left)
2D	23	Engine Room Main Wire and Engine Room J/B (Engine Compartment Left)
2E		
2F		
2H		

: CONNECTOR JOINING WIRE HARNESS AND WIRE HARNESS

Code	See Page	Joining Wire Harness and Wire Harness (Connector Location)
IA1	44	Front Door LH Wire and Instrument Panel Wire (Left Kick Panel)
IA2		
IB1	44	Roof Wire and Instrument Panel Wire (left Kick Panel)
IE4	44	Engine Room Main Wire and Instrument Panel Wire (Instrument Panel Brace LH)
IE5		
IF1	46	Floor Wire and Instrument Panel Wire (Instrument Panel Brace LH)
IH1	46	Front Door RH Wire and Instrument Panel Wire (Right Kick Panel)
IH2		
II1	46	Engine Room Main Wire and Floor Wire (Instrument Panel Brace LH)
BA1	48	Back Door No.1 Wire and Floor Wire (Quarter Panel LH)
BB1	48	Back Door No.2 Wire and Back Door No.1 Wire (Back Door Upper Left)

: GROUND POINTS

Code	See Page	Ground Points Location
EB	40 (1ZZ–FE)	Front Left Fender
	42 (2ZZ–GE)	
IE	44	Cowl Side Panel LH
IF	44	Instrument Panel Brace RH
IH	44	Cowl Side Panel RH
BJ	48	Luggage Room Left

WIRELESS DOOR LOCK CONTROL

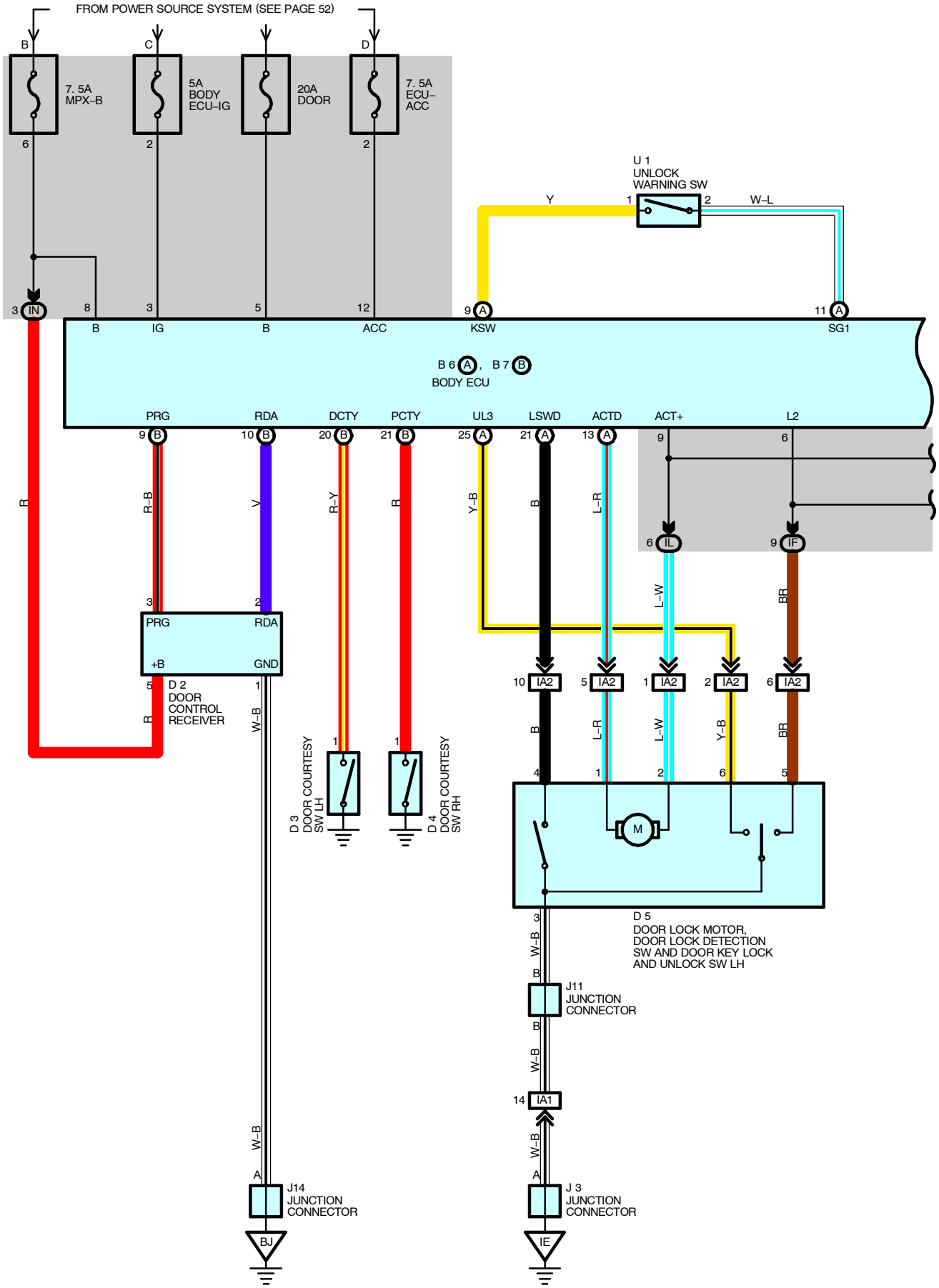

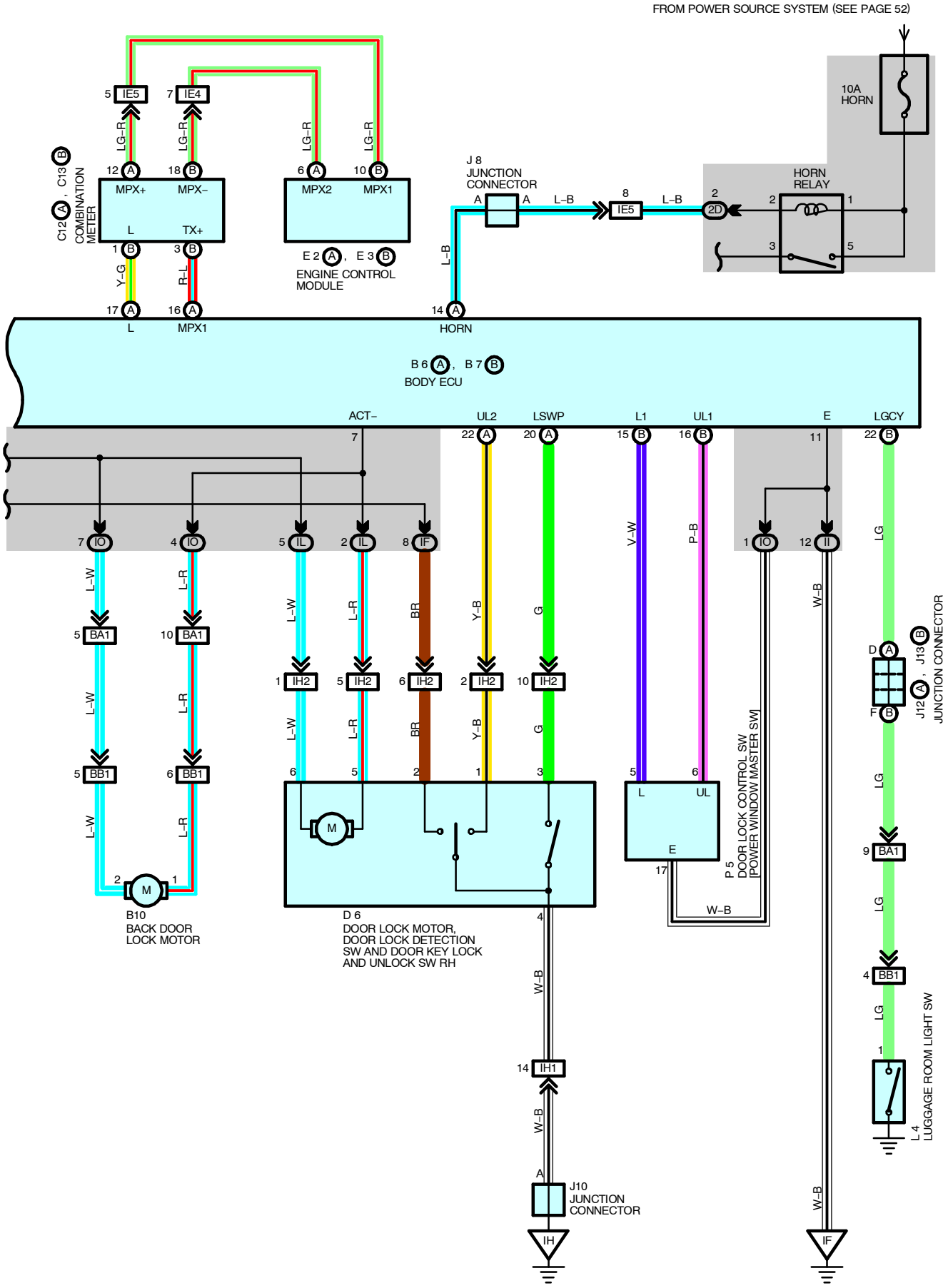
FROM POWER SOURCE SYSTEM (SEE PAGE 52)
10A
HORN
HORN
RELAY
J 8
JUNCTION
CONNECTOR
C12 A , C13 B
COMBINATION
METER
MPX+
MPX–
L
TX+
MPX2
MPX1
E 2 A , E 3 B
ENGINE CONTROL
MODULE
IE5
IE4
LG–R
Y–G
R–L
L–B
2D
B 6 A , B 7 B
BODY ECU
ACT–
UL2
LSWP
L1
UL1
E
LGCY
IO
IL
IF
II
BA1
BB1
IH2
IH1
L–W
L–R
BR
Y–B
G
V–W
P–B
W–B
LG
M
B10
BACK DOOR
LOCK MOTOR
D 6
DOOR LOCK MOTOR,
DOOR LOCK DETECTION
SW AND DOOR KEY LOCK
AND UNLOCK SW RH
P 5
DOOR LOCK CONTROL SW
[POWER WINDOW MASTER SW]
J10
JUNCTION
CONNECTOR
IH
IF
J12 A , J13 B
JUNCTION CONNECTOR
L 4
LUGGAGE ROOM LIGHT SW

WIRELESS DOOR LOCK CONTROL

SYSTEM OUTLINE

In this system, the door control receiver receives weak radio wave transmitted from the transmitter built into the ignition key, and outputs signals to the body ECU. Through communication control of the body ECU, all the doors can be locked and unlocked by remote control.

1. NORMAL OPERATION

* Lock operation
  When the lock SW on the transmitter is pressed, all doors are locked.
* Unlock operation
  When the unlock SW on the transmitter is pressed once, only the driver door is unlocked. When the unlock SW is pressed again within 3 seconds, all the doors are unlocked.

2. AUTO LOCK FUNCTION

If the door is not opened within 30 seconds after the door has been unlocked by pressing the unlock SW on the transmitter, all the doors will be locked automatically.

3. WIRELESS DOOR LOCK STOP FUNCTION

If any of the following conditions is detected, the wireless door lock does not function.

* Lock operation
  Any door is open (The door courtesy SW is on). The ignition key is inserted into the ignition key cylinder (The unlock warning SW is on). The ignition SW is turned to the ON position.
* Unlock operation
  The ignition SW is turned to the ON position.

4. BUZZER SOUND FUNCTION

The buzzer emits a sound when operating the transmitter, once for lock operation and twice for unlock operation.
When the lock SW is pressed while any door is open, the keyless buzzer goes on for 10 seconds. The buzzer will stop when all the doors are closed, or when unlocked with the unlock SW.

5. ILLUMINATED ENTRY FUNCTION

When the ECU detects the unlock state after the unlock operation has been made, it turns on the front interior light, such as the ignition key cylinder light for 15 sec. If all the doors are locked during this operation, lighting is cancelled and the lights immediately fade out.

6. REPEAT FUNCTION

If the lock detection signal in response to the output signal is not received after the body ECU has output the lock signal, the lock signal is output again after approximately 2 sec.

7. PANIC FUNCTION

When the panic SW on the transmitter is pressed, the panic mode is activated. The panic mode is canceled when the unlock SW or panic SW is pressed.

SERVICE HINTS

U1 UNLOCK WARNING SW

2–1 : Closed with the ignition key in the cylinder

D2 DOOR CONTROL RECEIVER

5–GROUND : Always approx. **12** volts
1–GROUND : Always continuity

○ : PARTS LOCATION

Code		See Page	Code		See Page	Code		See Page
B6	A	36	D5		38	J10		37
B7	B	36	D6		38	J11		38
B10		38	E2	A	32 (1ZZ–FE)	J12	A	38
C12	A	36			34 (2ZZ–GE)	J13	B	38
C13	B	36	E3	B	32 (1ZZ–FE)	J14		38
D2		38			34 (2ZZ–GE)	L4		38
D3		38	J3		37	P5		37
D4		38	J8		37	U1		37

: JUNCTION BLOCK AND WIRE HARNESS CONNECTOR

Code	See Page	Junction Block and Wire Harness (Connector Location)
IF	25	Instrument Panel Wire and Instrument Panel J/B (Instrument Panel Brace RH)
II		
IL		
IN	25	Floor Wire and Instrument Panel J/B (Instrument Panel Brace RH)
IO		
2D	23	Engine Room Main Wire and Engine Room J/B (Engine Compartment Left)

: CONNECTOR JOINING WIRE HARNESS AND WIRE HARNESS

Code	See Page	Joining Wire Harness and Wire Harness (Connector Location)
IA1	44	Front Door LH Wire and Instrument Panel Wire (Left Kick Panel)
IA2		
IE4	44	Engine Room Main Wire and Instrument Panel Wire (Instrument Panel Brace LH)
IE5		
IH1	46	Front Door RH Wire and Instrument Panel Wire (Right Kick Panel)
IH2		
BA1	48	Back Door No.1 Wire and Floor Wire (Quarter Panel LH)
BB1	48	Back Door No.2 Wire and Back Door No.1 Wire (Back Door Upper Left)

: GROUND POINTS

Code	See Page	Ground Points Location
IE	44	Cowl Side Panel LH
IF	44	Instrument Panel Brace RH
IH	44	Cowl Side Panel RH
BJ	48	Luggage Room Left

DOOR LOCK CONTROL

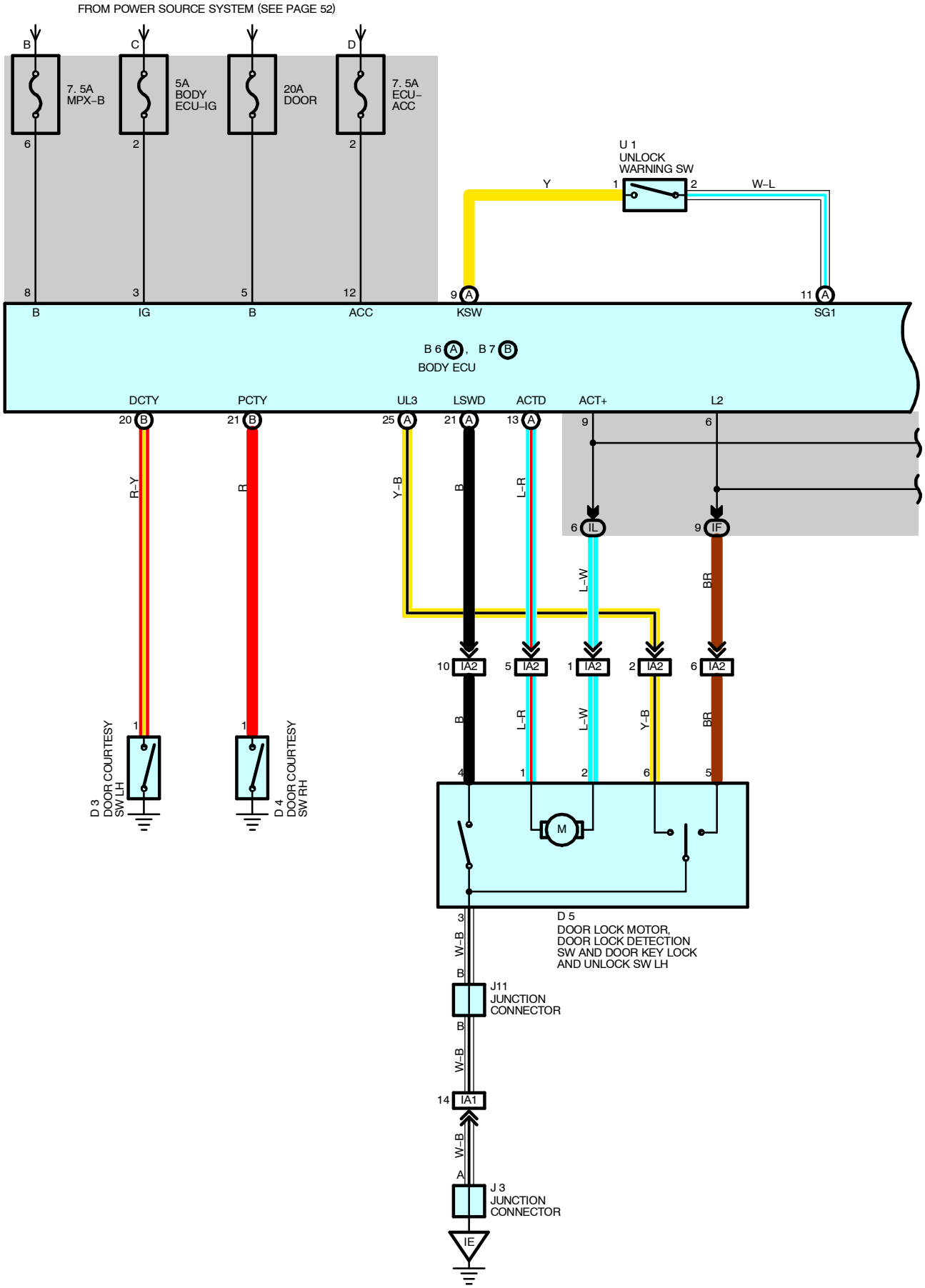

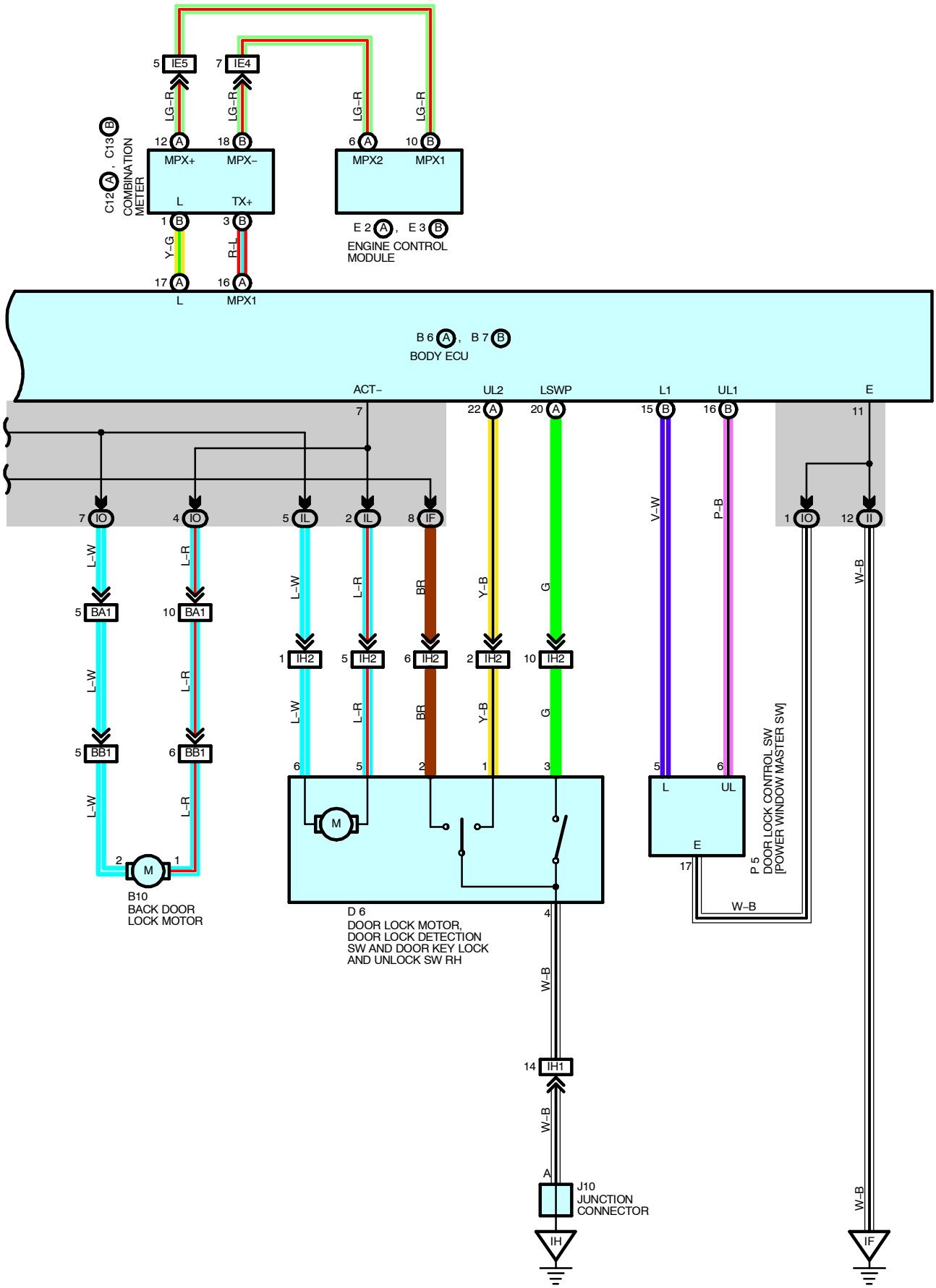
5 IE5
7 IE4
LG-R
LG-R
LG-R
LG-R
C12 A , C13 B
COMBINATION METER
12 A
18 B
MPX+
MPX-
L
TX+
1 B
3 B
Y-G
R-L
17 A
16 A
L
MPX1
6 A
10 B
MPX2
MPX1
E 2 A , E 3 B
ENGINE CONTROL MODULE
B 6 A , B 7 B
BODY ECU
ACT-
UL2
LSWP
L1
UL1
E
7
22 A
20 A
15 B
16 B
11
7 IO
4 IO
5 IL
2 IL
8 IF
1 IO
12 II
L-W
L-R
L-W
L-R
BR
Y-B
G
V-W
P-B
W-B
5 BA1
10 BA1
1 IH2
5 IH2
6 IH2
2 IH2
10 IH2
L-W
L-R
L-W
L-R
BR
Y-B
G
5 BB1
6 BB1
6
5
2
1
3
5
6
L-W
L-R
M
L
UL
E
2
1
M
17
P 5
DOOR LOCK CONTROL SW
[POWER WINDOW MASTER SW]
B10
BACK DOOR LOCK MOTOR
D 6
DOOR LOCK MOTOR, DOOR LOCK DETECTION SW AND DOOR KEY LOCK AND UNLOCK SW RH
4
W-B
W-B
14 IH1
W-B
A
J10
JUNCTION CONNECTOR
IH
IF
W-B

DOOR LOCK CONTROL

SYSTEM OUTLINE

1. MANUAL UNLOCK OPERATION

When the door lock control SW on the center console is pressed to the UNLOCK, the signal is input to TERMINAL UL1 of the body ECU. The current flows from TERMINAL ACT− of the body ECU into the door lock motor to TERMINAL ACT+ of the body ECU to GROUND, to unlock the door.

2. MANUAL LOCK OPERATION

When the door lock control SW on the center console is pressed to LOCK, signal is input to TERMINAL L1 of the body ECU. The current flows from TERMINAL ACT+ of the body ECU to door lock motor to TERMINAL ACT− of the body ECU to GROUND, to lock the door.

3. DOOR KEY UNLOCK OPERATION

Unlock operation from driver door

When the door is unlocked once by the ignition key from the driver side, the signal from the door key lock and unlock SW in the door lock motor front LH is input to TERMINAL UL3 of the body ECU. This signal activates the body ECU to flow the current from TERMINAL ACT+ of the body ECU into the door lock motor front LH to TERMINAL ACT− of the body ECU to GROUND, to unlock only the driver door. Accordingly, if the second unlock operation is made within 3 sec. after the above unlock operation.

Unlock operation from passenger door

When the door is unlocked by the ignition key from the passenger side, the signal from the door key lock and unlock SW in the door lock motor front RH is input to TERMINAL UL2 of the body ECU. The current flows from TERMINAL ACT− of the body ECU into the door lock motor front RH to TERMINAL ACT+ of the body ECU to GROUND, to unlock all the doors at once.

4. IGNITION KEY REMINDER OPERATION

When the door lock operation is made using the door knob with the ignition key remained inserted in the key cylinder and the door open, unlock operation is automatically made. Additionally, if lock operation is made with the door lock control SW or door key lock and unlock SW, unlock operation is automatically made after the lock operation has been completed.

SERVICE HINTS

D3, D4 DOOR COURTESY SW LH, RH

1−GROUND : Closed with door open

P5 DOOR LOCK CONTROL SW [POWER WINDOW MASTER SW]

5−17 : Closed with **LOCK** position
6−17 : Closed with **UNLOCK** position

D5 DOOR LOCK MOTOR, DOOR LOCK DETECTION SW AND DOOR KEY LOCK AND LOCK SW LH

2−GROUND : Approx. **12** volts with door lock motor at lock operate
1−GROUND : Approx. **12** volts with door lock motor at unlock operate
5−3 : Closed with door lock cylinder locked with key
6−3 : Closed with door lock cylinder unlocked with key

D6 DOOR LOCK MOTOR, DOOR LOCK DETECTION SW AND DOOR KEY LOCK AND LOCK SW RH

6−GROUND : Approx. **12** volts with door lock motor at lock operate
5−GROUND : Approx. **12** volts with door lock motor at unlock operate
2−4 : Closed with door lock cylinder locked with key
1−4 : Closed with door lock cylinder unlocked with key

○ : PARTS LOCATION

Code		See Page	Code		See Page	Code		See Page
B6	A	36	D4		38	E3	B	34 (2ZZ−GE)
B7	B	36	D5		38	J3		37
B10		38	D6		38	J10		37
C12	A	36	E2	A	32 (1ZZ−FE)	J11		38
C13	B	36			34 (2ZZ−GE)	P5		37
D3		38	E3	B	32 (1ZZ−FE)	U1		37

: JUNCTION BLOCK AND WIRE HARNESS CONNECTOR

Code	See Page	Junction Block and Wire Harness (Connector Location)
IF	25	Instrument Panel Wire and Instrument Panel J/B (Instrument Panel Brace RH)
II		
IL		
IO	25	Floor Wire and Instrument Panel J/B (Instrument Panel Brace RH)

: CONNECTOR JOINING WIRE HARNESS AND WIRE HARNESS

Code	See Page	Joining Wire Harness and Wire Harness (Connector Location)
IA1	44	Front Door LH Wire and Instrument Panel Wire (Left Kick Panel)
IA2		
IE4	44	Engine Room Main Wire and Instrument Panel Wire (Instrument Panel Brace LH)
IE5		
IH1	46	Front Door RH Wire and Instrument Panel Wire (Right Kick Panel)
IH2		
BA1	48	Back Door No.1 Wire and Floor Wire (Quarter Panel LH)
BB1	48	Back Door No.2 Wire and Back Door No.1 Wire (Back Door Upper Left)

: GROUND POINTS

Code	See Page	Ground Points Location
IE	44	Cowl Side Panel LH
IF	44	Instrument Panel Brace RH
IH	44	Cowl Side Panel RH

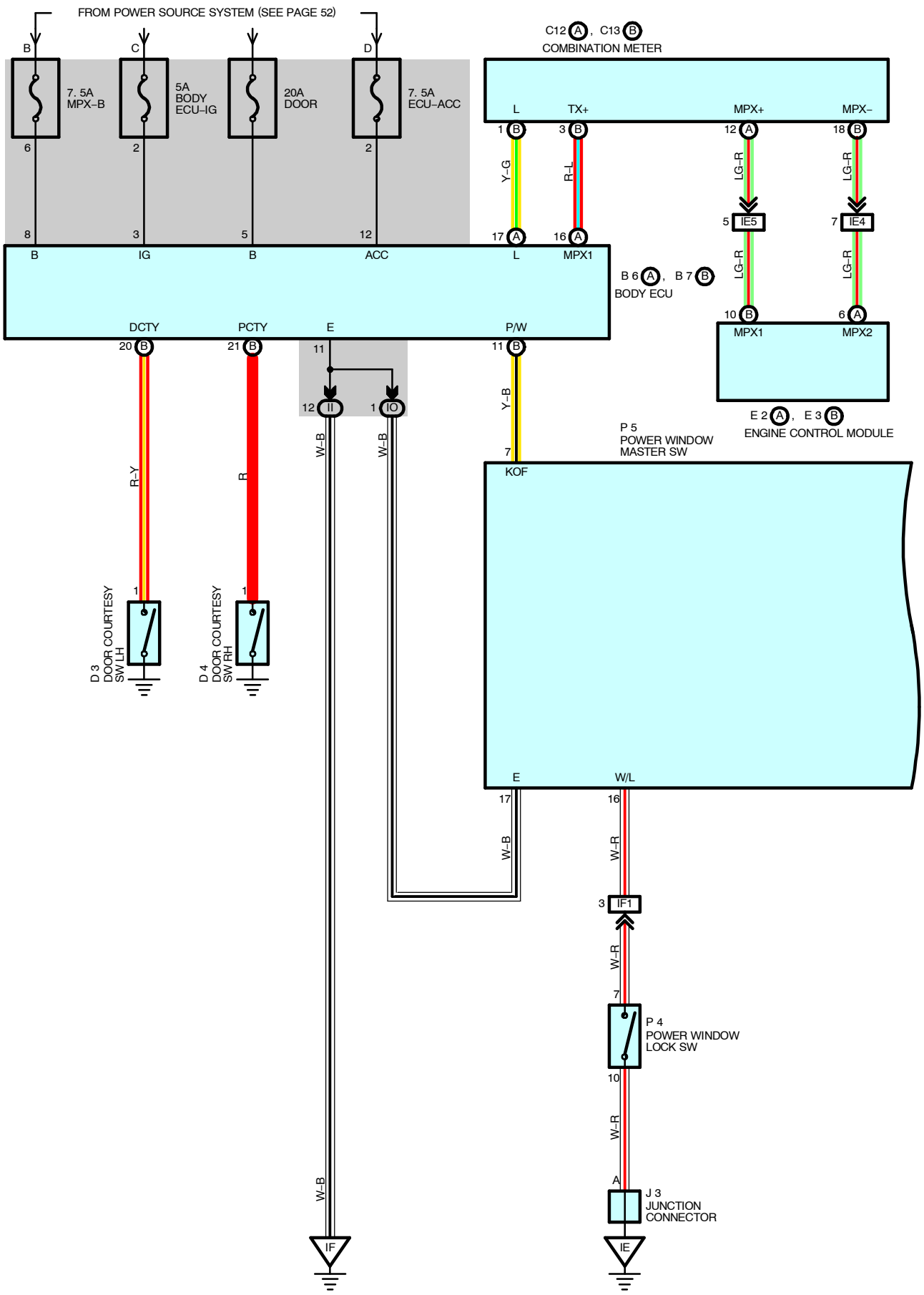
FROM POWER SOURCE SYSTEM (SEE PAGE 52)
7. 5A MPX–B
5A BODY ECU–IG
20A DOOR
7. 5A ECU–ACC
C12 A, C13 B
COMBINATION METER
L
TX+
MPX+
MPX–
Y–G
R–L
LG–R
IE5
IE4
B
IG
ACC
MPX1
B 6 A, B 7 B
BODY ECU
DCTY
PCTY
E
P/W
MPX2
Y–B
E 2 A, E 3 B
ENGINE CONTROL MODULE
P 5
POWER WINDOW MASTER SW
KOF
R–Y
R
W–B
D 3
DOOR COURTESY SW LH
D 4
DOOR COURTESY SW RH
W/L
W–R
IF1
P 4
POWER WINDOW LOCK SW
J 3
JUNCTION CONNECTOR
IF
IE

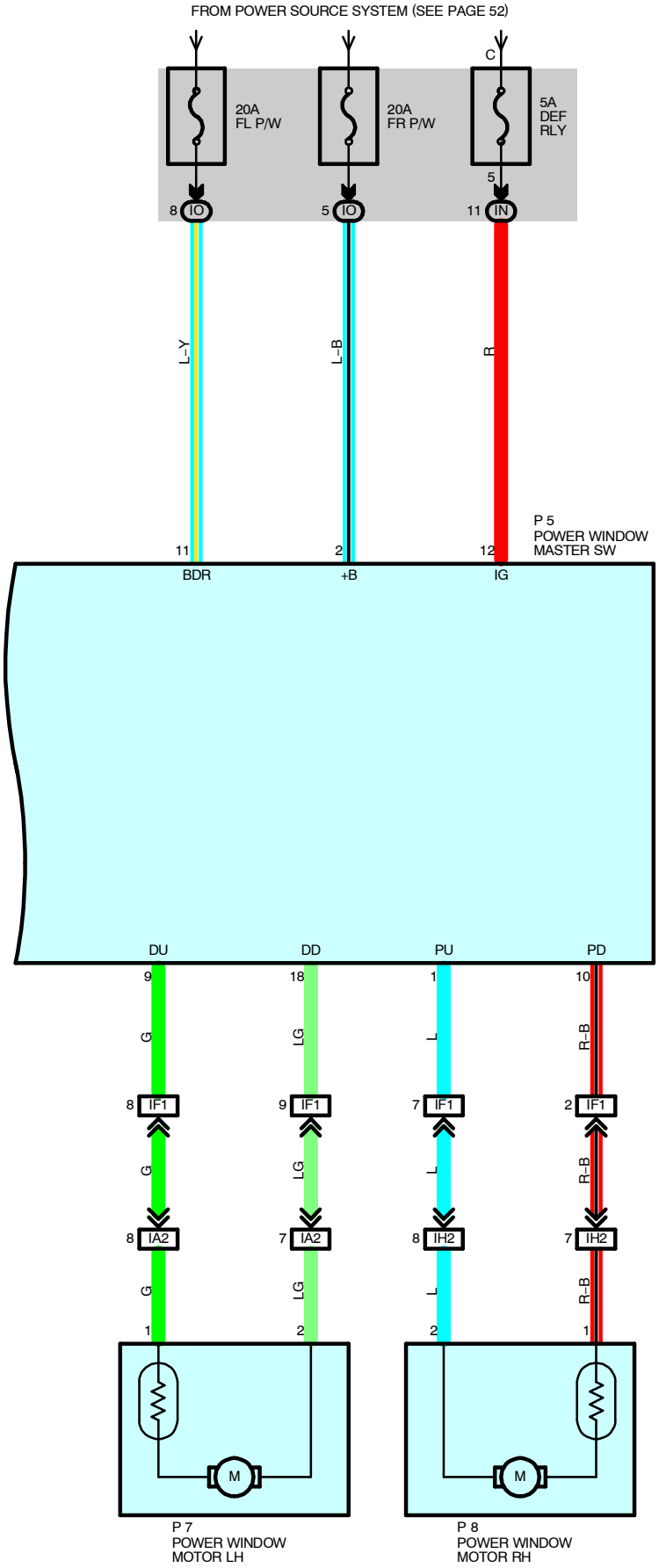
FROM POWER SOURCE SYSTEM (SEE PAGE 52)
20A
FL P/W
20A
FR P/W
C
5A
DEF
RLY
5
8 IO
5 IO
11 IN
L-Y
L-B
R
P 5
POWER WINDOW
MASTER SW
11
2
12
BDR
+B
IG
DU
DD
PU
PD
9
18
1
10
G
LG
L
R-B
8 IF1
9 IF1
7 IF1
2 IF1
G
LG
L
R-B
8 IA2
7 IA2
8 IH2
7 IH2
G
LG
L
R-B
1
2
2
1
M
M
P 7
POWER WINDOW
MOTOR LH
P 8
POWER WINDOW
MOTOR RH

SYSTEM OUTLINE

1. MANUAL OPERATION BY POWER WINDOW SW (DRIVER'S WINDOW)

With the ignition SW turned on and with the power window master SW (Driver's side) in UP position, current to TERMINAL 2 of the power window master SW flows to TERMINAL 9 of the master SW to TERMINAL 1 of the power window motor LH to motor to TERMINAL 2 to TERMINAL 17 of the master SW to GROUND, causing the power window motor to rotate in the up direction. The window ascends only while the SW is being pushed. In down operation, the flow of current from TERMINAL 2 of the power window master SW to TERMINAL 18 of the master SW causes the flow of current from TERMINAL 2 of the motor to motor to TERMINAL 1 to TERMINAL 5 of the master SW to TERMINAL 17 to GROUND, flowing in the opposite direction to manual up operation, causing the motor to rotate in reverse and lowering the window.

2. AUTO DOWN OPERATION (DRIVER'S WINDOW)

With the ignition SW on and the driver's SW of the power window master SW in DOWN position, current to TERMINAL 2 of the master SW flows to TERMINAL 18 of the master SW to TERMINAL 2 of the power window motor LH to motor to TERMINAL 1 to TERMINAL 9 of the master SW to TERMINAL 17 to GROUND, causing the motor to rotate towards the down side. Then the control unit in the master SW is activated and it locks the driver's SW being pushed, causing the motor to continue to rotate in auto down operation.

When the window has completely descended, the current flowing between TERMINAL 9 of the master SW and TERMINAL 17 increases. As a result, the solenoid stops operating, the driver's SW turns off and the flow from TERMINAL 2 of the master SW to TERMINAL 18 is cut off, stopping the motor so that auto stop occurs.

3. STOPPING OF AUTO DOWN OPERATION (DRIVER'S WINDOW)

When the driver's SW is pushed to the up side during auto down operation, a ground circuit opens in the master SW and current does not flow from TERMINAL 9 of the master SW to TERMINAL 16, so the motor stops, causing auto down operation to stop. If the driver's SW is pushed continuously, the motor rotates in the up direction in manual up operation.

4. MANUAL OPERATION BY POWER WINDOW SW (PASSENGER'S WINDOW)

With power window master SW (Passenger's side) pushed to the up side, current from TERMINAL 11 of the power window master SW flows to TERMINAL 1 of the power window master SW to TERMINAL 2 of the window motor RH to motor to TERMINAL 1 to TERMINAL 10 of the power window master SW to TERMINAL 16 to TERMINAL 7 of the window lock SW to TERMINAL 10 to GROUND, causing the power window motor RH to rotate in the up direction. Up operation continues only while the power window master SW is pushed to the up side. When the window descends, current to the motor flows in the opposite direction, from TERMINAL 1 to motor to TERMINAL 2, and the motor rotates in reverse. When the window lock SW is pushed out to the normal side, the ground circuit to the passenger's window becomes open.

As a result, even if Open/Close operation of the passenger's window is tried, current from TERMINAL 11 of the power window master SW is not grounded and the motor does not rotate, so the passenger's window cannot be operated and window lock occurs.

5. KEY OFF POWER WINDOW OPERATION

Within approx. 43 sec. after the ignition SW is turned from on to off, the power window can be operated. However, if the driver or passenger door is opened during this period of time, the power window operation is stopped even through 43 sec. have not elapsed.

SERVICE HINTS

D3, D4 DOOR COURTESY SW LH, RH

1–GROUND : Closed with the door open

P5 POWER WINDOW MASTER SW

17–GROUND : Always continuity
12–GROUND : Approx. **12** volts with the ignition SW on
9–GROUND : Approx. **12** volts with the ignition SW at **ON** position and the master SW at **UP** position
18–GROUND : Approx. **12** volts with the ignition SW at **ON** position and the master SW at **DOWN** or **AUTO DOWN** position

P4 POWER WINDOW LOCK SW

7–10 : Open with the window lock SW at **LOCK** position

○ : PARTS LOCATION

Code		See Page	Code		See Page	Code	See Page
B6	A	36	D4		38	J3	37
B7	B	36	E2	A	32 (1ZZ–FE)	P4	37
C12	A	36			34 (2ZZ–GE)	P5	37
C13	B	36	E3	B	32 (1ZZ–FE)	P7	39
D3		38			34 (2ZZ–GE)	P8	39

: JUNCTION BLOCK AND WIRE HARNESS CONNECTOR

Code	See Page	Junction Block and Wire Harness (Connector Location)
II	25	Instrument Panel Wire and Instrument Panel J/B (Instrument Panel Brace RH)
IN	25	Floor Wire and Instrument Panel J/B (Instrument Panel Brace RH)
IO		

: CONNECTOR JOINING WIRE HARNESS AND WIRE HARNESS

Code	See Page	Joining Wire Harness and Wire Harness (Connector Location)
IA2	44	Front Door LH Wire and Instrument Panel Wire (Left Kick Panel)
IE4	44	Engine Room Main Wire and Instrument Panel Wire (Instrument Panel Brace LH)
IE5		
IF1	46	Floor Wire and Instrument Panel Wire (Instrument Panel Brace LH)
IH2	46	Front Door RH Wire and Instrument Panel Wire (Right Kick Panel)

: GROUND POINTS

Code	See Page	Ground Points Location
IE	44	Cowl Side Panel LH
IF	44	Instrument Panel Brace RH

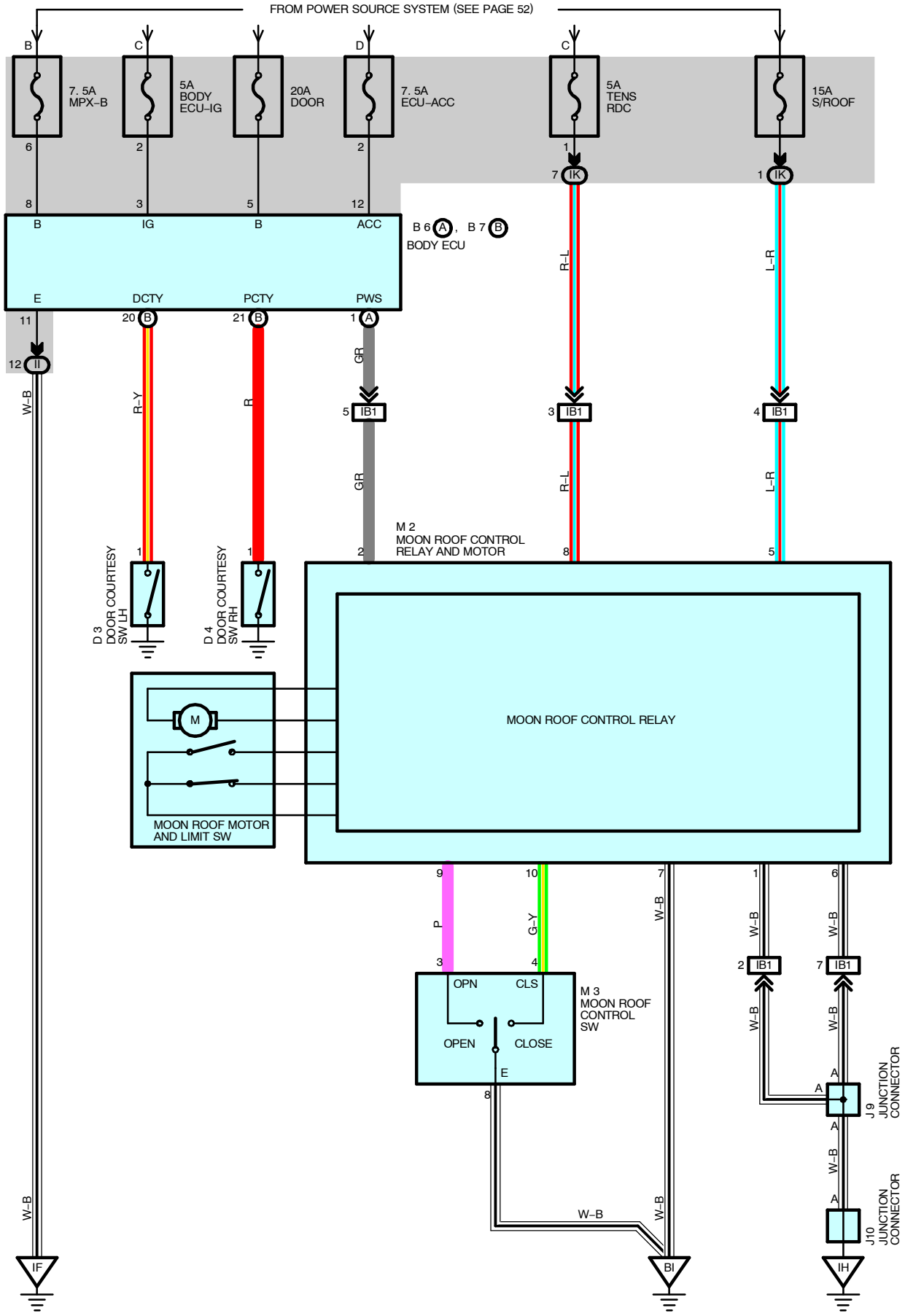
FROM POWER SOURCE SYSTEM (SEE PAGE 52)
7. 5A MPX–B
5A BODY ECU–IG
20A DOOR
7. 5A ECU–ACC
5A TENS RDC
15A S/ROOF
B
IG
B
ACC
E
DCTY
PCTY
PWS
B 6 A, B 7 B
BODY ECU
IK
II
IB1
W–B
R–Y
R
GR
R–L
L–R
M 2
MOON ROOF CONTROL RELAY AND MOTOR
D 3
DOOR COURTESY SW LH
D 4
DOOR COURTESY SW RH
M
MOON ROOF MOTOR AND LIMIT SW
MOON ROOF CONTROL RELAY
P
G–Y
OPN
CLS
OPEN
CLOSE
M 3
MOON ROOF CONTROL SW
J 9
JUNCTION CONNECTOR
J10
JUNCTION CONNECTOR
IF
BI
IH

SYSTEM OUTLINE

KEY OFF MOON ROOF OPERATION

Within approx. 43 sec. after the ignition SW is turned from on to off, the moon roof can be operated. However, if the driver or passenger door is opened during this period of time, the moon roof operation is stopped even through 43 sec. have not elapsed.

SERVICE HINTS

M2 MOON ROOF CONTROL RELAY AND MOTOR

1, 6–GROUND : Always continuity
8–GROUND : Approx. **12** volts with the ignition SW at **ON** position
10–GROUND : Approx. **12** volts with the ignition SW on and the moon roof control SW at **CLOSE** or **UP** position
9–GROUND : Approx. **12** volts with the ignition SW on and the moon roof control SW at **OPEN** or **DOWN** position

M3 MOON ROOF CONTROL SW

4–8 : Closed with the moon roof control SW at **CLOSE** position
3–8 : Closed with the moon roof control SW at **OPEN** position
8–GROUND : Always continuity

○ : PARTS LOCATION

Code		See Page	Code	See Page	Code	See Page
B6	A	36	D4	38	M2	39
B7	B	36	J9	37	M3	39
D3		38	J10	37		

: JUNCTION BLOCK AND WIRE HARNESS CONNECTOR

Code	See Page	Junction Block and Wire Harness (Connector Location)
II	25	Instrument Panel Wire and Instrument Panel J/B (Instrument Panel Brace RH)
IK		

: CONNECTOR JOINING WIRE HARNESS AND WIRE HARNESS

Code	See Page	Joining Wire Harness and Wire Harness (Connector Location)
IB1	44	Roof Wire and Instrument Panel Wire (left Kick Panel)

▽ : GROUND POINTS

Code	See Page	Ground Points Location
IF	44	Instrument Panel Brace RH
IH	44	Cowl Side Panel RH
BI	48	Roof Left

ELECTRIC TENSION REDUCER

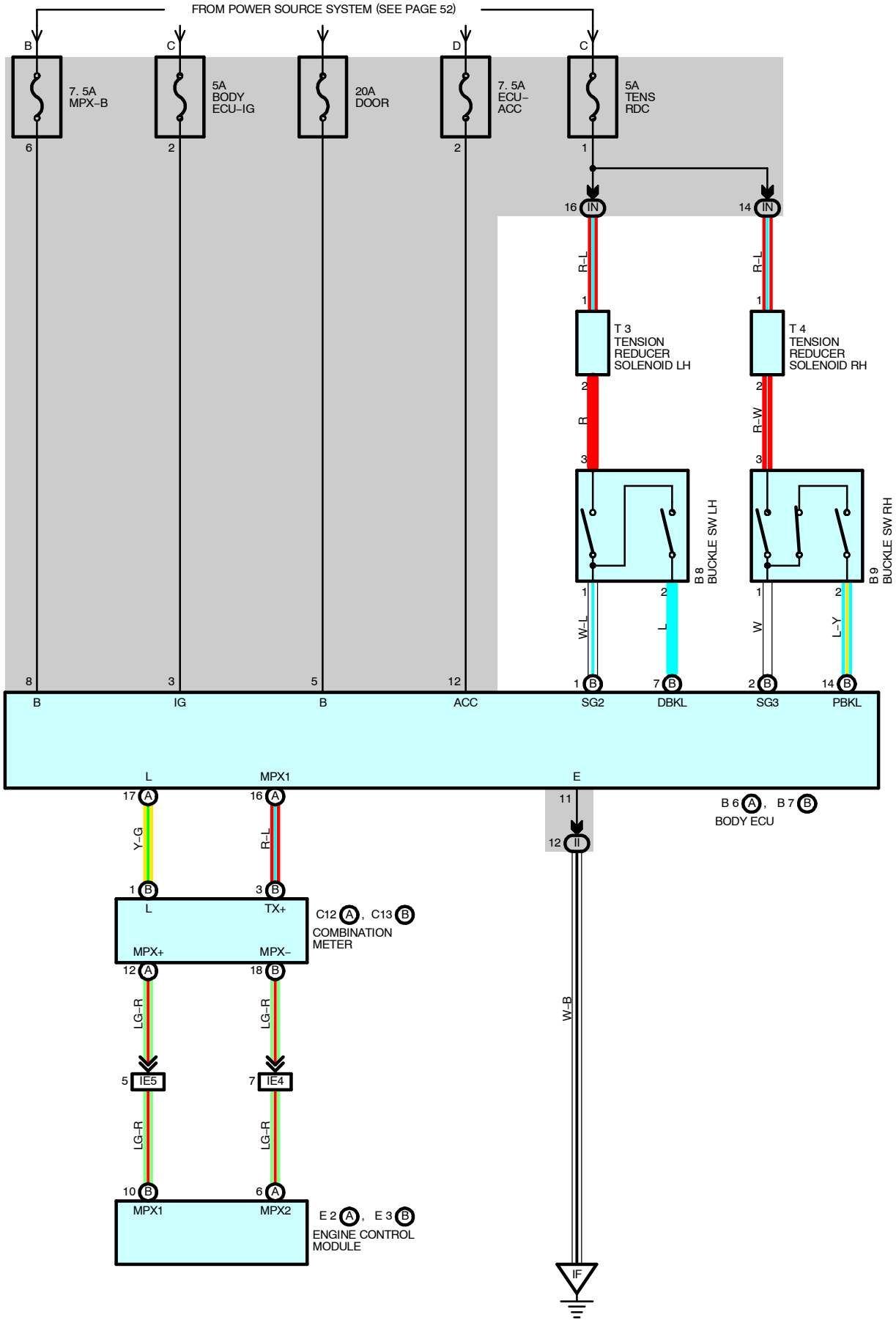

SERVICE HINTS

B8 BUCKLE SW LH

1–3 : Closed with the driver's seat belt in use

B9 BUCKLE SW RH

1–3 : Closed with the passenger's seat belt in use

T3, T4 TENSION REDUCER SOLENOID LH, RH

1–GROUND : Approx. **12** volts with the ignition SW at **ON** position

○ : PARTS LOCATION

Code		See Page	Code		See Page	Code		See Page
B6	A	36	C12	A	36	E3	B	32 (1ZZ–FE)
B7	B	36	C13	B	36			34 (2ZZ–GE)
B8		36	E2	A	32 (1ZZ–FE)	T3		39
B9		36			34 (2ZZ–GE)	T4		39

: JUNCTION BLOCK AND WIRE HARNESS CONNECTOR

Code	See Page	Junction Block and Wire Harness (Connector Location)
II	25	Instrument Panel Wire and Instrument Panel J/B (Instrument Panel Brace RH)
IN	25	Floor Wire and Instrument Panel J/B (Instrument Panel Brace RH)

: CONNECTOR JOINING WIRE HARNESS AND WIRE HARNESS

Code	See Page	Joining Wire Harness and Wire Harness (Connector Location)
IE4	44	Engine Room Main Wire and Instrument Panel Wire (Instrument Panel Brace LH)
IE5		

▽ : GROUND POINTS

Code	See Page	Ground Points Location
IF	44	Instrument Panel Brace RH

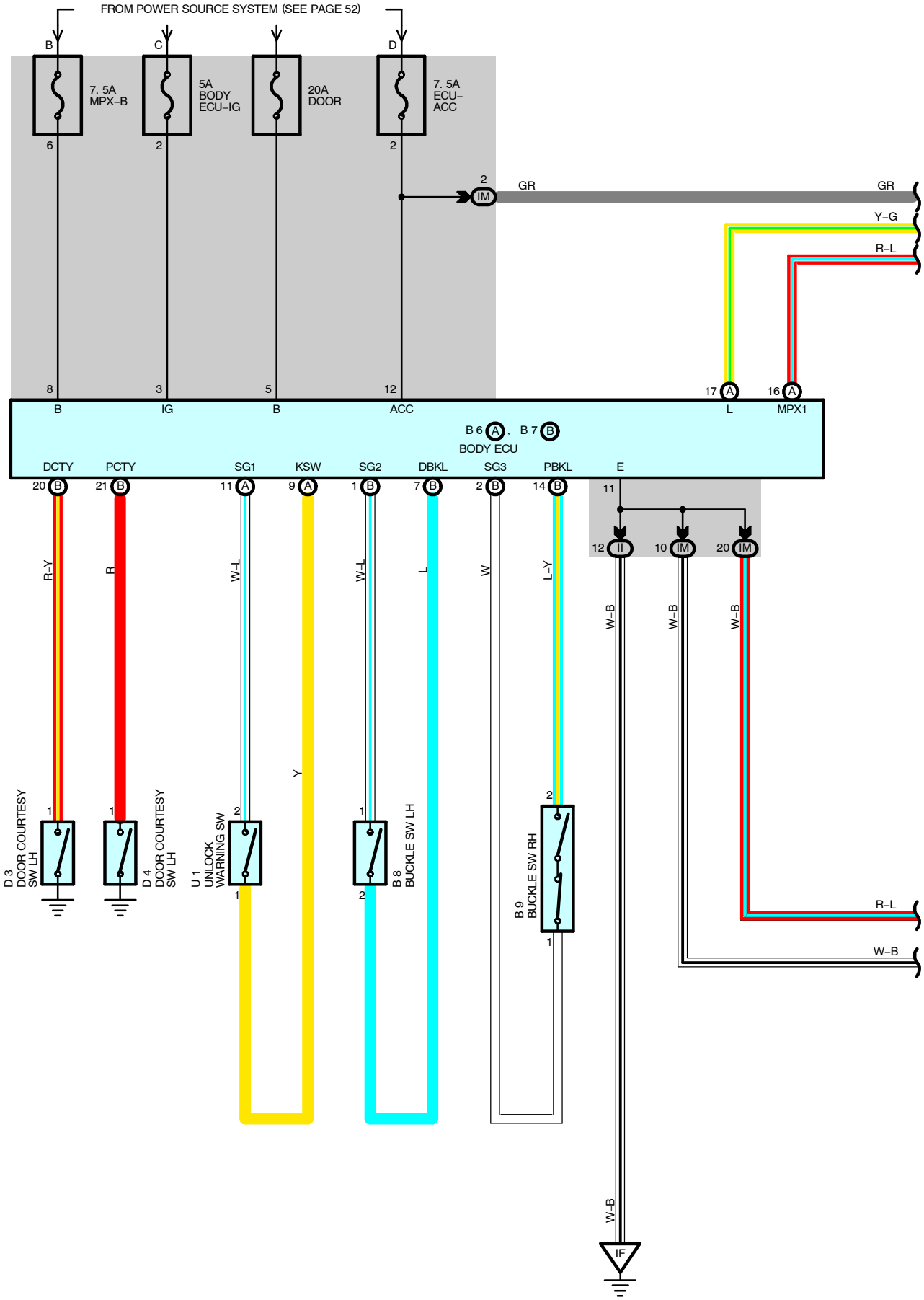
FROM POWER SOURCE SYSTEM (SEE PAGE 52)
B
C
D
7. 5A
MPX–B
5A
BODY
ECU–IG
20A
DOOR
7. 5A
ECU–
ACC
6
2
2
2
IM
GR
GR
Y–G
R–L
8
3
5
12
17 A
16 A
B
IG
B
ACC
L
MPX1
B 6 A , B 7 B
BODY ECU
DCTY
PCTY
SG1
KSW
SG2
DBKL
SG3
PBKL
E
20 B
21 B
11 A
9 A
1 B
7 B
2 B
14 B
11
12 II
10 IM
20 IM
R–Y
R
W–L
W–L
L
W
L–Y
W–B
W–B
W–B
Y
D 3
DOOR COURTESY
SW LH
D 4
DOOR COURTESY
SW LH
U 1
UNLOCK
WARNING SW
B 8
BUCKLE SW LH
B 9
BUCKLE SW RH
R–L
W–B
W–B
IF

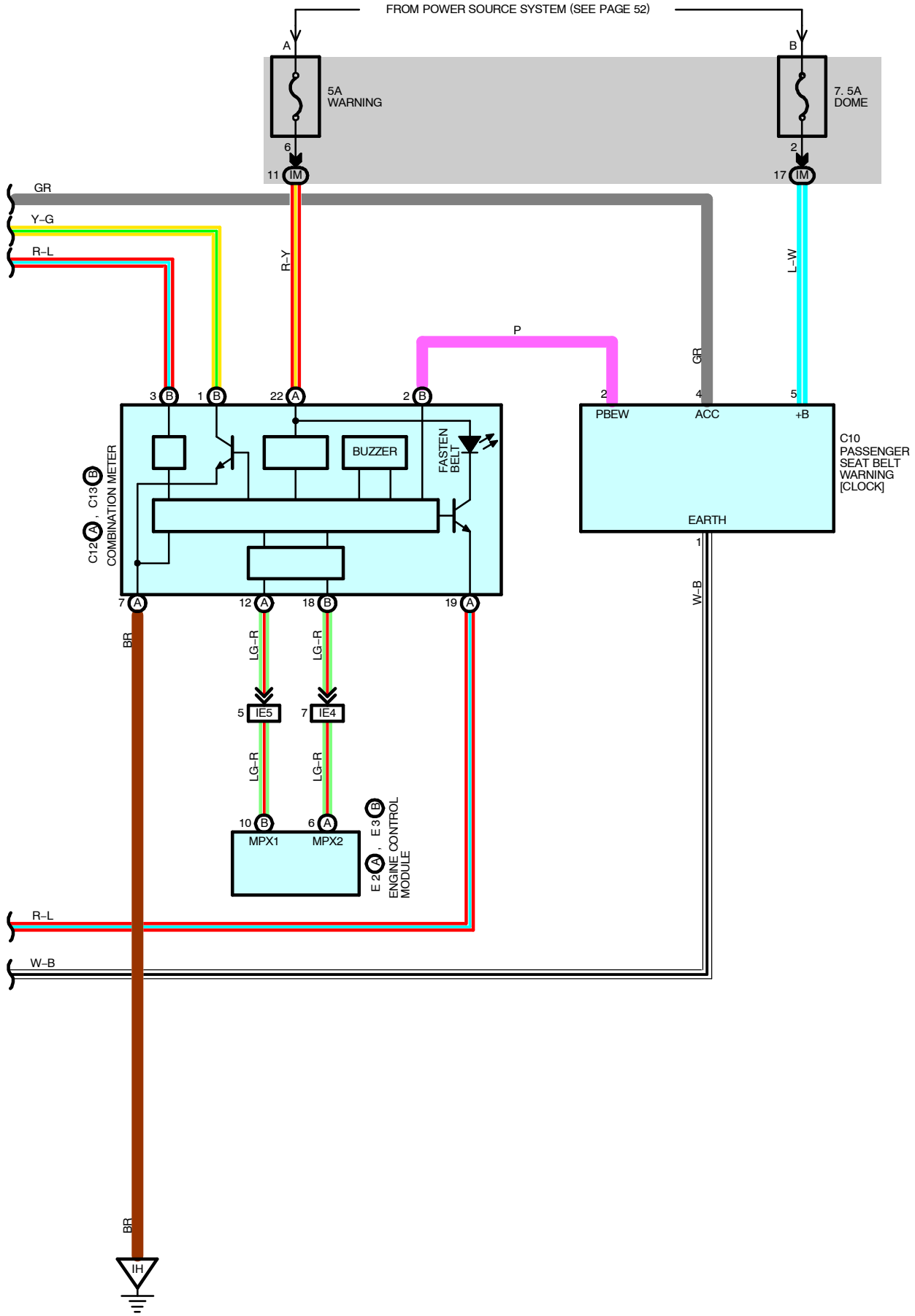
FROM POWER SOURCE SYSTEM (SEE PAGE 52)
A
B
5A
WARNING
7. 5A
DOME
6
2
11 IM
17 IM
GR
Y–G
R–L
R–Y
L–W
P
GR
3 B
1 B
22 A
2 B
2
4
5
PBEW
ACC
+B
C10
PASSENGER
SEAT BELT
WARNING
[CLOCK]
BUZZER
FASTEN
BELT
C12 A , C13 B
COMBINATION METER
EARTH
1
W–B
7 A
12 A
18 B
19 A
BR
LG–R
LG–R
5 IE5
7 IE4
LG–R
LG–R
10 B
6 A
MPX1
MPX2
E 2 A , E 3 B
ENGINE CONTROL
MODULE
R–L
W–B
BR
IH

KEY REMINDER AND SEAT BELT WARNING

SYSTEM OUTLINE

1. SEAT BELT WARNING SYSTEM

When the ignition SW is turned to the ON position, the signal is input to the body ECU. At this time, to determine whether or not the driver fastens the seat belt, the signal from the buckle SW LH is input to TERMINAL DBKL of the body ECU. If the driver does not fasten the seat belt, the seat belt warning light in the combination meter flashes and the alarm buzzer goes on, in response to the communication control of the body ECU etc.
Additionally, the sensor (Inside of buckle SW RH) installed on the front passenger seat detects the passenger and determines whether or not the passenger fastens the seat belt.
If the passenger does not fasten the seat belt, the front passenger seat belt warning light is flashed.

2. KEY REMINDER SYSTEM

If the driver door is opened with the ignition SW set at the ACC or OFF position and the ignition key remained inserted into the key cylinder (The unlock warning SW is on), the signal from the unlock warning SW is input to TERMINAL KSW of the body ECU and the signal from the door courtesy SW LH is input to TERMINAL DCTY of body ECU. As a result, through communication control of the body ECU etc. the buzzer in the combination meter goes on to warn the driver that the ignition key is still inserted.

SERVICE HINTS

B8 BUCKLE SW LH

1–2 : Opened with the driver's seat belt in use

D3 DOOR COURTESY SW LH

1–GROUND : Closed with the LH door open

U1 UNLOCK WARNING SW

2–1 : Closed with the ignition key in the cylinder

: PARTS LOCATION

Code		See Page	Code		See Page	Code		See Page
B6	A	36	C12	A	36	E2	A	34 (2ZZ–GE)
B7	B	36	C13	B	36	E3	B	32 (1ZZ–FE)
B8		36	D3		38			34 (2ZZ–GE)
B9		36	D4		38	U1		37
C10		36	E2	A	32 (1ZZ–FE)			

: JUNCTION BLOCK AND WIRE HARNESS CONNECTOR

Code	See Page	Junction Block and Wire Harness (Connector Location)
II	25	Instrument Panel Wire and Instrument Panel J/B (Instrument Panel Brace RH)
IM		

: CONNECTOR JOINING WIRE HARNESS AND WIRE HARNESS

Code	See Page	Joining Wire Harness and Wire Harness (Connector Location)
IE4	44	Engine Room Main Wire and Instrument Panel Wire (Instrument Panel Brace LH)
IE5		

: GROUND POINTS

Code	See Page	Ground Points Location
IF	44	Instrument Panel Brace LH
IH	44	Cowl Side Panel RH

NOTICE: When inspecting or repairing the SRS, perform the operation in accordance with the following precautionary instructions and the procedure and precautions in the Repair Manual for the applicable model year.

- Malfunction symptoms of the SRS are difficult to confirm, so the DTCs become the most important source of information when troubleshooting. When troubleshooting the SRS, always inspect the DTCs before disconnecting the battery.
- **Work must be started after 90 seconds from when the ignition switch is turned to the ”LOCK” position and the negative (–) terminal cable is disconnected from the battery.**
  (The SRS is equipped with a back–up power source so that if work is started within 90 seconds from disconnecting the negative (–) terminal cable of the battery, the SRS may be deployed.)
- When the negative (–) terminal cable is disconnected from the battery, the memory of the clock and audio system will be canceled. So before starting work, make a record of the contents memorized in the audio memory system. When work is finished, reset the audio systems as they were before and adjust the clock. To avoid erasing the memory in each memory system, never use a back–up power supply from outside the vehicle.
- Before repairs, remove the airbag sensor if shocks are likely to be applied to the sensor during repairs.
- Do not expose the steering wheel pad, front passenger airbag assembly, center airbag sensor assembly, front airbag sensor assembly, door side airbag sensor or side airbag sensor assembly directly to hot air or flames.
- Even in cases of a minor collision where the SRS does not deploy, the steering wheel pad, front passenger airbag assembly, center airbag sensor assembly, front airbag sensor assembly should be inspected.
- Never use SRS parts from another vehicle. When replacing parts, replace them with new parts.
- Never disassemble and repair the steering wheel pad, front passenger airbag assembly, center airbag sensor assembly, front airbag sensor assembly in order to reuse it.
- If the steering wheel pad, front passenger airbag assembly, center airbag sensor assembly, front airbag sensor assembly has been dropped, or if there are cracks, dents or other defects in the case, bracket or connector, replace them with new ones.
- Use a volt/ohmmeter with high impedance (10 kΩ/V minimum) for troubleshooting the system’s electrical circuits.
- Information labels are attached to the periphery of the SRS components. Follow the instructions on the notices.
- After work on the SRS is completed, perform the SRS warning light check.
- If the vehicle is equipped with a mobile communication system, refer to the precaution in the IN section of the Repair Manual.

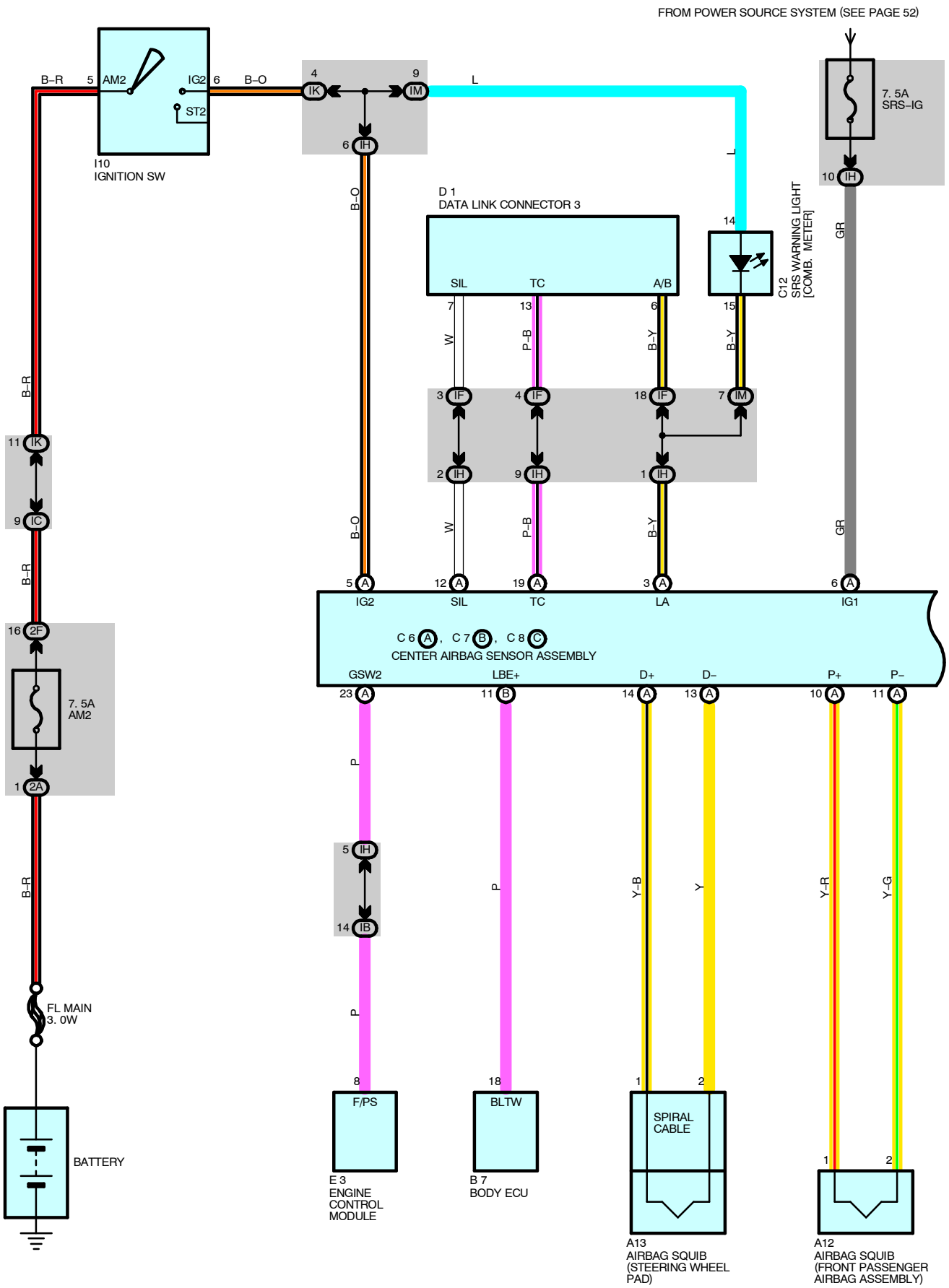
FROM POWER SOURCE SYSTEM (SEE PAGE 52)
I10
IGNITION SW
AM2
IG2
ST2
B–R
B–O
L
7. 5A
SRS–IG
D 1
DATA LINK CONNECTOR 3
SIL
TC
A/B
C12
SRS WARNING LIGHT
[COMB. METER]
GR
W
P–B
B–Y
IG2
SIL
TC
LA
IG1
C 6 A, C 7 B, C 8 C
CENTER AIRBAG SENSOR ASSEMBLY
GSW2
LBE+
D+
D–
P+
P–
7. 5A
AM2
P
Y–B
Y
Y–R
Y–G
FL MAIN
3. 0W
BATTERY
F/PS
E 3
ENGINE
CONTROL
MODULE
BLTW
B 7
BODY ECU
SPIRAL
CABLE
A13
AIRBAG SQUIB
(STEERING WHEEL
PAD)
A12
AIRBAG SQUIB
(FRONT PASSENGER
AIRBAG ASSEMBLY)

* 1 : W/ SIDE AIRBAG

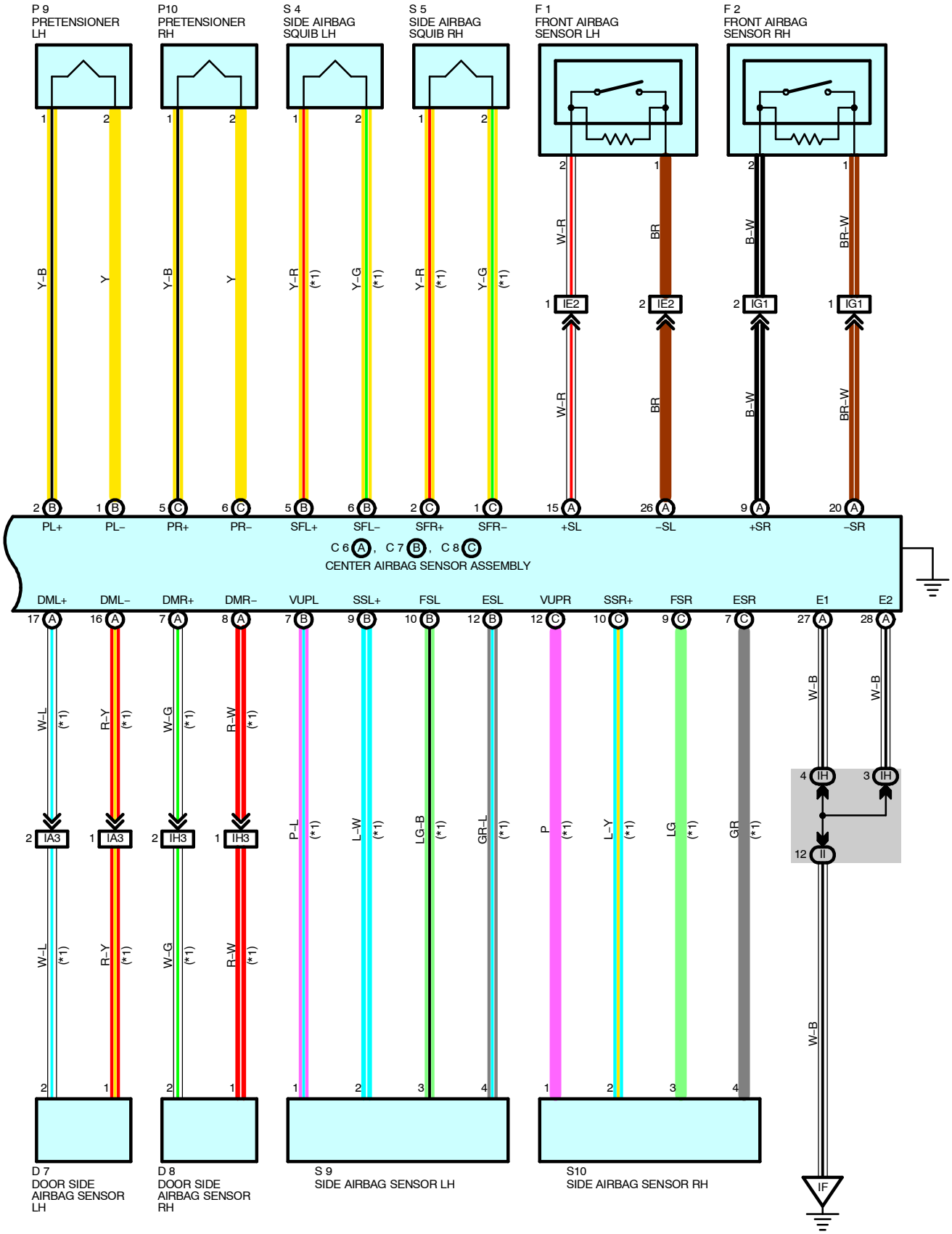

SYSTEM OUTLINE

The SRS is a driver and front passenger protection device which has a supplemental role to the seat belts.
When the ignition SW is on does, current from the SRS−IG fuse flows to TERMINAL (A) 6.
If an accident occurs while driving, deceleration caused by a frontal impact is detected by each of the sensor and the switch, in the center airbag sensor assembly and when the frontal impact exceeds a set level (When the safing sensor built into the center airbag sensor assembly is on and the center airbag sensor is on, the front airbag sensor are off), current from the SRS−IG fuse flows to TERMINALS (A) 14, (A) 10 of the center airbag sensor assembly to TERMINAL 1 of the airbag squib to TERMINAL 2 to TERMINALS (A) 13, (A) 11 of the center airbag sensor assembly to TERMINAL (A) 27, TERMINAL (A) 28 or BODY GROUND to GROUND.
When the safing sensor built into the center airbag sensor assembly is on and the front airbag sensor LH or RH is on, the center airbag sensor is off and current from the SRS−IG fuse flows to TERMINALS (A) 14, (A) 10 of the center airbag sensor assembly to TERMINAL 1 of the airbag squib to TERMINAL 2 to TERMINALS (A) 13, (A) 11 of the center airbag sensor assembly to TERMINAL (A) 9 or (A) 15 to TERMINAL 2 of the front airbag sensor to TERMINAL 1 to TERMINAL (A) 20 or (A) 26 of the center airbag sensor assembly to TERMINAL 27, TERMINAL 28 or BODY GROUND to GROUND, when the safing sensor built into the center airbag sensor assembly is on, and the front airbag sensor LH or RH is on and the center airbag sensor is on, one of the above−mentioned circuits is activated so that current flows to the airbag squibs, causing it to operate.
The airbag stored inside the steering wheel pad is instantaneously expanded to soften the shock to the driver.
Simultaneously, the airbag stored inside the passenger's instrument panel is instantaneously expanded to soften the shock to the passenger.

○ : PARTS LOCATION

Code		See Page	Code	See Page	Code	See Page
A12		36	D7	38	I10	37
A13		36	D8	38	P9	39
B7		36	E3	32 (1ZZ−FE)	P10	39
C6	A	36		34 (2ZZ−GE)	S4	37
C7	B	36	F1	32 (1ZZ−FE)	S5	37
C8	C	36		34 (2ZZ−GE)	S9	39
C12		36	F2	32 (1ZZ−FE)	S10	39
D1		36		34 (2ZZ−GE)		

: JUNCTION BLOCK AND WIRE HARNESS CONNECTOR

Code	See Page	Junction Block and Wire Harness (Connector Location)
IB	25	Engine Room Main Wire and Instrument Panel J/B (Instrument Panel Brace RH)
IC		
IF	25	Instrument Panel Wire and Instrument Panel J/B (Instrument Panel Brace RH)
IH		
II		
IK		
IM		
2A	23	Engine Wire and Engine Room J/B (Engine Compartment Left)
2F	23	Engine Room Main Wire and Engine Room J/B (Engine Compartment Left)

: CONNECTOR JOINING WIRE HARNESS AND WIRE HARNESS

Code	See Page	Joining Wire Harness and Wire Harness (Connector Location)
IA3	44	Front Door LH Wire and Instrument Panel Wire (Left Kick Panel)
IE2	44	Engine Room Main Wire and Instrument Panel Wire (Instrument Panel Brace LH)
IG1	46	Engine Room No.2 Wire and Instrument Panel Wire (Right Kick Panel)
IH3	46	Front Door RH Wire and Instrument Panel Wire (Right Kick Panel)

▽ : GROUND POINTS

Code	See Page	Ground Points Location
IF	44	Instrument Panel Brace RH

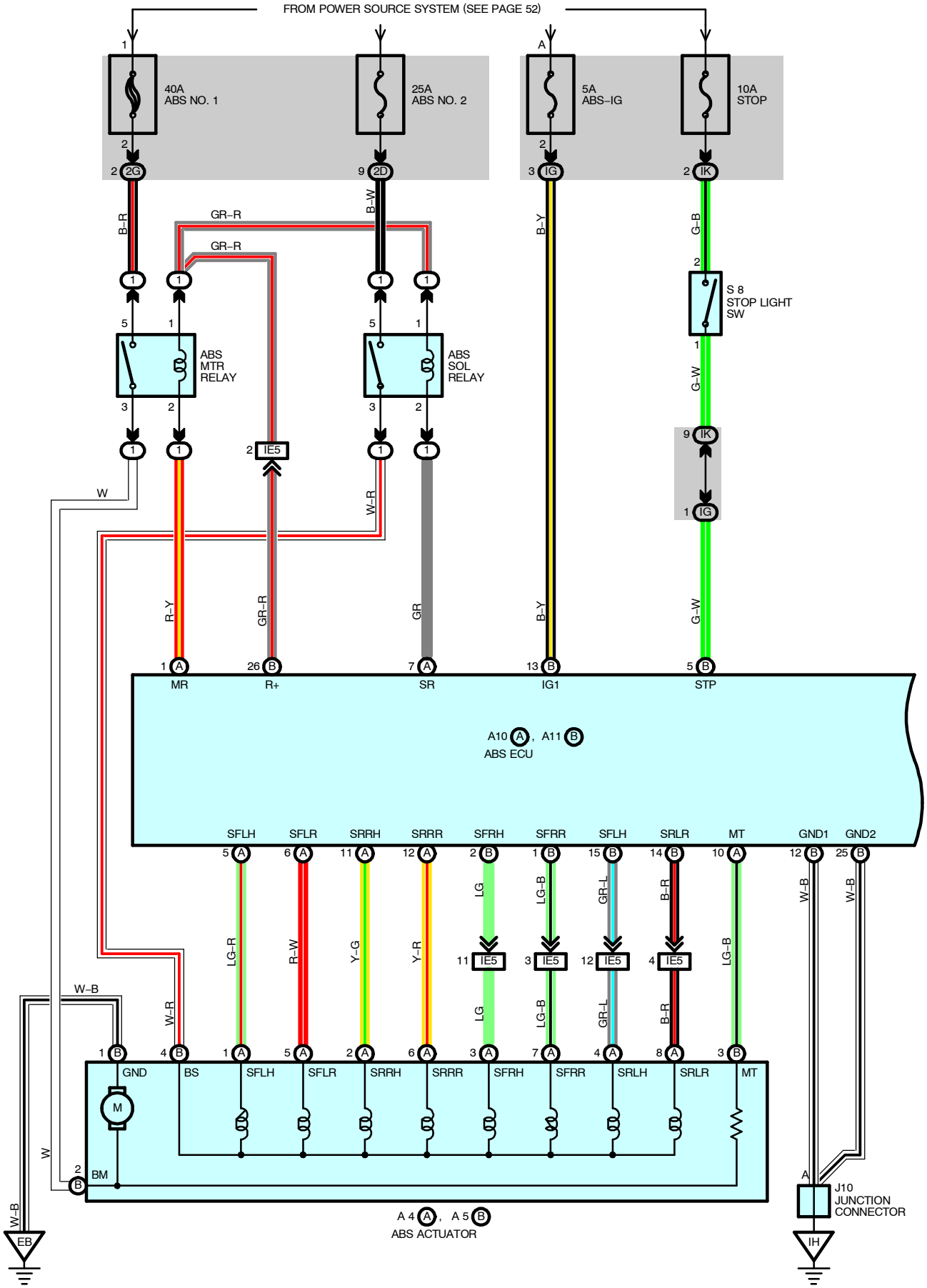
FROM POWER SOURCE SYSTEM (SEE PAGE 52)
40A
ABS NO. 1
25A
ABS NO. 2
5A
ABS–IG
10A
STOP
2G
2D
IG
IK
B–R
B–W
B–Y
G–B
GR–R
GR–R
S 8
STOP LIGHT
SW
ABS
MTR
RELAY
ABS
SOL
RELAY
IE5
G–W
W
W–R
R–Y
GR–R
GR
B–Y
G–W
MR
R+
SR
IG1
STP
A10 A, A11 B
ABS ECU
SFLH
SFLR
SRRH
SRRR
SFRH
SFRR
SFLH
SRLR
MT
GND1
GND2
LG–R
R–W
Y–G
Y–R
LG
LG–B
GR–L
B–R
LG–B
W–B
W–R
GND
BS
SFLH
SFLR
SRRH
SRRR
SFRH
SFRR
SRLH
SRLR
MT
M
BM
A 4 A, A 5 B
ABS ACTUATOR
J10
JUNCTION
CONNECTOR
EB
IH

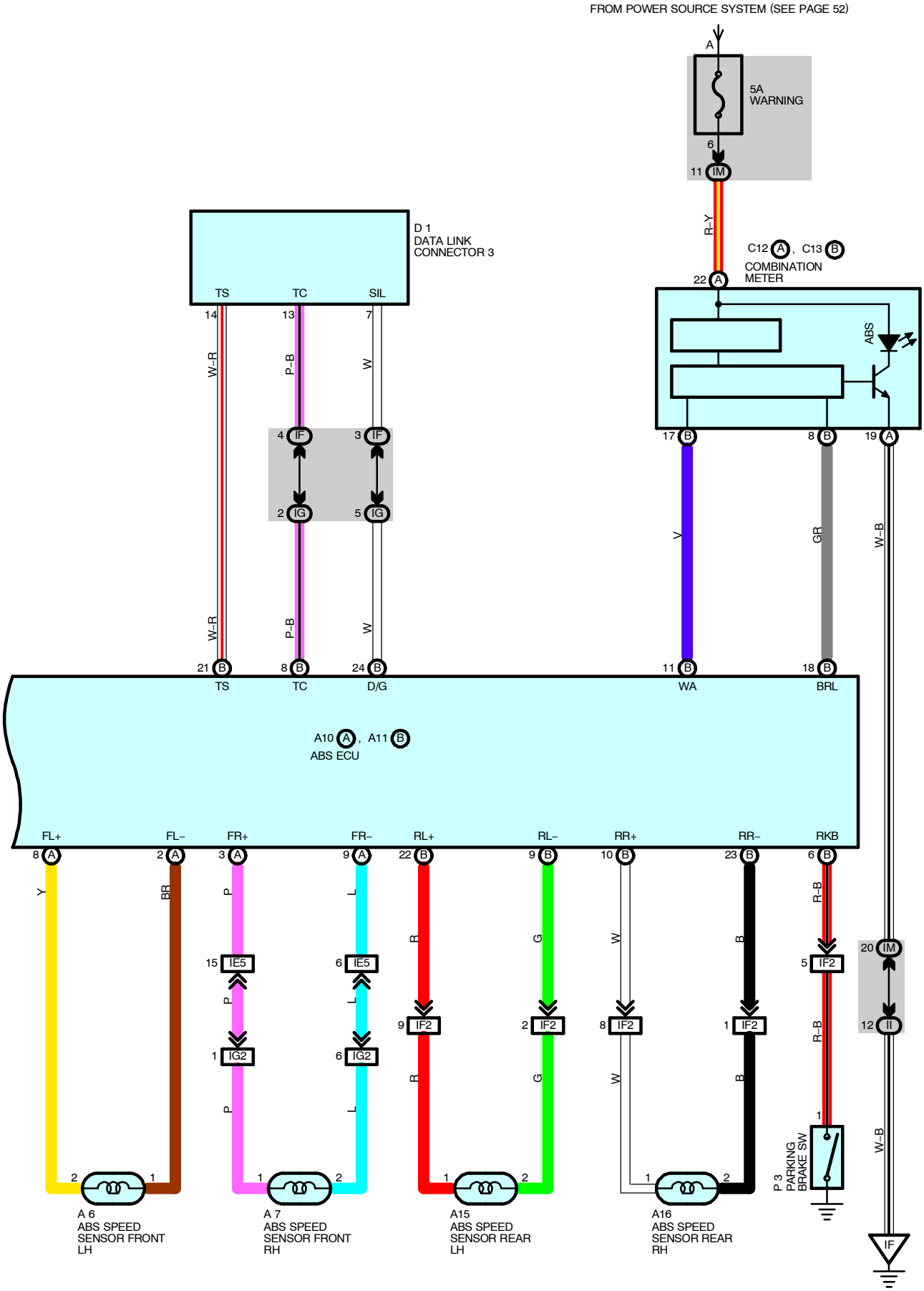
FROM POWER SOURCE SYSTEM (SEE PAGE 52)
A
5A
WARNING
6
11 IM
R–Y
C12 A , C13 B
COMBINATION
METER
22 A
D 1
DATA LINK
CONNECTOR 3
TS
TC
SIL
14
13
7
W–R
P–B
W
4 IF
3 IF
2 IG
5 IG
ABS
17 B
8 B
19 A
V
GR
W–B
21 B
8 B
24 B
11 B
18 B
TS
TC
D/G
WA
BRL
A10 A , A11 B
ABS ECU
FL+
FL–
FR+
FR–
RL+
RL–
RR+
RR–
RKB
8 A
2 A
3 A
9 A
22 B
9 B
10 B
23 B
6 B
Y
BR
P
L
R
G
W
B
R–B
15 IE5
6 IE5
9 IF2
2 IF2
8 IF2
1 IF2
5 IF2
20 IM
12 II
1 IG2
6 IG2
P 3
PARKING
BRAKE SW
A 6
ABS SPEED
SENSOR FRONT
LH
A 7
ABS SPEED
SENSOR FRONT
RH
A15
ABS SPEED
SENSOR REAR
LH
A16
ABS SPEED
SENSOR REAR
RH
IF

SYSTEM OUTLINE

This system controls the respective brake fluid pressures acting on the brake cylinders of the right front wheel, the left front wheel, the right rear wheel and the left rear wheel when the brakes are applied in a panic stop so that the wheels do not lock. This results in improved directional stability and steerability during panic braking.

1. INPUT SIGNALS

(1) Speed sensor signal
The speed of the wheels is detected and input to TERMINALS FL+, FR+, RL+ and RR+ of the ABS ECU.

(2) Stop light SW signal
A signal is input to TERMINAL STP of the ABS ECU when the brake pedal depressed.

2. SYSTEM OPERATION

During sudden braking the ABS ECU which has signals input from each of the sensor, controls current to the solenoid inside the actuator and causes the hydraulic pressure acting on each of the wheel cylinder escape to the reservoir. The pump inside the actuator is also operating at this time and it returns the brake fluid from the reservoir to the master cylinder, preventing locking of the vehicle wheels.
If the ECU judges that the hydraulic pressure acting on the wheel cylinder is insufficient, the current acting on the solenoid is controlled and the hydraulic pressure is increased. Holding of the hydraulic pressure is also controlled by the ECU, by the same method as above. By repeated pressure reduction, holding and increase are repeated to maintain vehicle stability and to improve steerability during sudden braking.

SERVICE HINTS

A10 (A), A11 (B) ABS ECU

(Connect the ECU connector)
(B)21–GROUND : Approx. **12** volts with the ignition SW at **ON** position
(B) 8–GROUND : Approx. **12** volts with the ignition SW at **ON** position
(A) 5–GROUND : Approx. **12** volts with the ignition SW at **ON** position and the ABS warning light goes off
(A) 6–GROUND : Approx. **12** volts with the ignition SW at **ON** position and the ABS warning light goes off
(A)11–GROUND : Approx. **12** volts with the ignition SW at **ON** position and the ABS warning light goes off
(A)12–GROUND : Approx. **12** volts with the ignition SW at **ON** position and the ABS warning light goes off
(B) 2–GROUND : Approx. **12** volts with the ignition SW at **ON** position and the ABS warning light goes off
(B) 1–GROUND : Approx. **12** volts with the ignition SW at **ON** position and the ABS warning light goes off
(B)15–GROUND : Approx. **12** volts with the ignition SW at **ON** position and the ABS warning light goes off
(B)14–GROUND : Approx. **12** volts with the ignition SW at **ON** position and the ABS warning light goes off
(B)13–GROUND : Approx. **12** volts with the ignition SW at **ON** position
(B) 5–GROUND : Approx. **12** volts with the brake pedal depressed
(B)12, (B) 25–GROUND : Always continuity

: PARTS LOCATION

Code		See Page	Code		See Page	Code		See Page
A4	A	32 (1ZZ–FE)	A7		32 (1ZZ–FE)	C12	A	36
		34 (2ZZ–GE)			34 (2ZZ–GE)	C13	B	36
A5	B	32 (1ZZ–FE)	A10	A	36	D1		36
		34 (2ZZ–GE)	A11	B	36	J10		37
A6		32 (1ZZ–FE)	A15		38	P3		37
		34 (2ZZ–GE)	A16		38	S8		37

: RELAY BLOCKS

Code	See Page	Relay Blocks (Relay Block Location)
1	26	Engine Room R/B No.1 (Engine Compartment Left)

: JUNCTION BLOCK AND WIRE HARNESS CONNECTOR

Code	See Page	Junction Block and Wire Harness (Connector Location)
IF	25	Instrument Panel Wire and Instrument Panel J/B (Instrument Panel Brace RH)
IG		
II		
IK		
IM		
2D	23	Engine Room Main Wire and Engine Room J/B (Engine Compartment Left)
2G		

: CONNECTOR JOINING WIRE HARNESS AND WIRE HARNESS

Code	See Page	Joining Wire Harness and Wire Harness (Connector Location)
IE5	44	Engine Room Main Wire and Instrument Panel Wire (Instrument Panel Brace LH)
IF2	46	Floor Wire and Instrument Panel Wire (Instrument Panel Brace LH)
IG2	46	Engine Room No.2 Wire and Instrument Panel Wire (Right Kick Panel)

: GROUND POINTS

Code	See Page	Ground Points Location
EB	40 (1ZZ–FE)	Front Left Fender
	42 (2ZZ–GE)	
IF	44	Instrument Panel Brace RH
IH	44	Cowl Side Panel RH

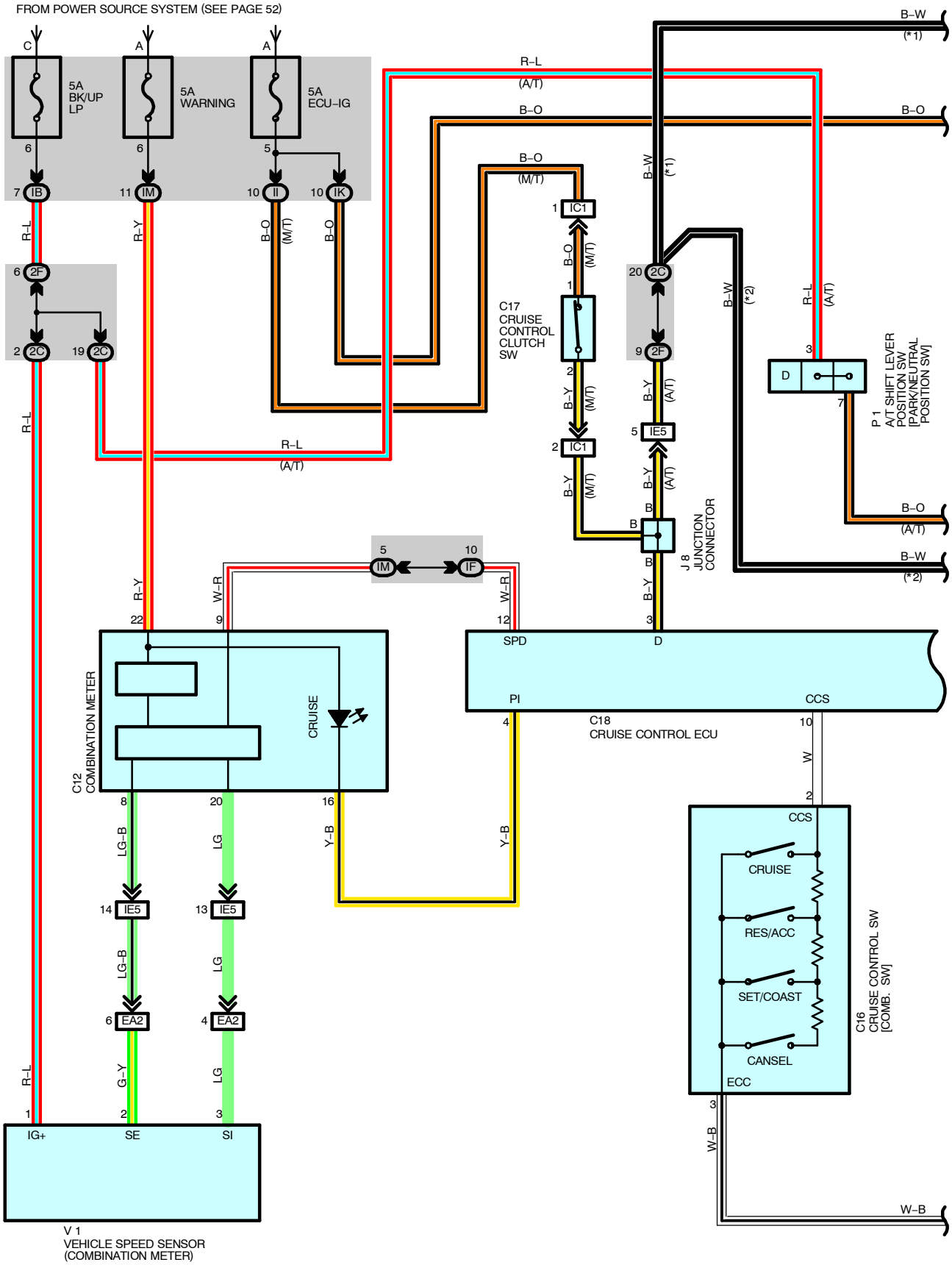
FROM POWER SOURCE SYSTEM (SEE PAGE 52)
5A BK/UP LP
5A WARNING
5A ECU-IG
C17 CRUISE CONTROL CLUTCH SW
P 1 A/T SHIFT LEVER POSITION SW [PARK/NEUTRAL POSITION SW]
J 8 JUNCTION CONNECTOR
C12 COMBINATION METER
CRUISE
C18 CRUISE CONTROL ECU
C16 CRUISE CONTROL SW [COMB. SW]
RES/ACC
SET/COAST
CANSEL
V 1 VEHICLE SPEED SENSOR (COMBINATION METER)

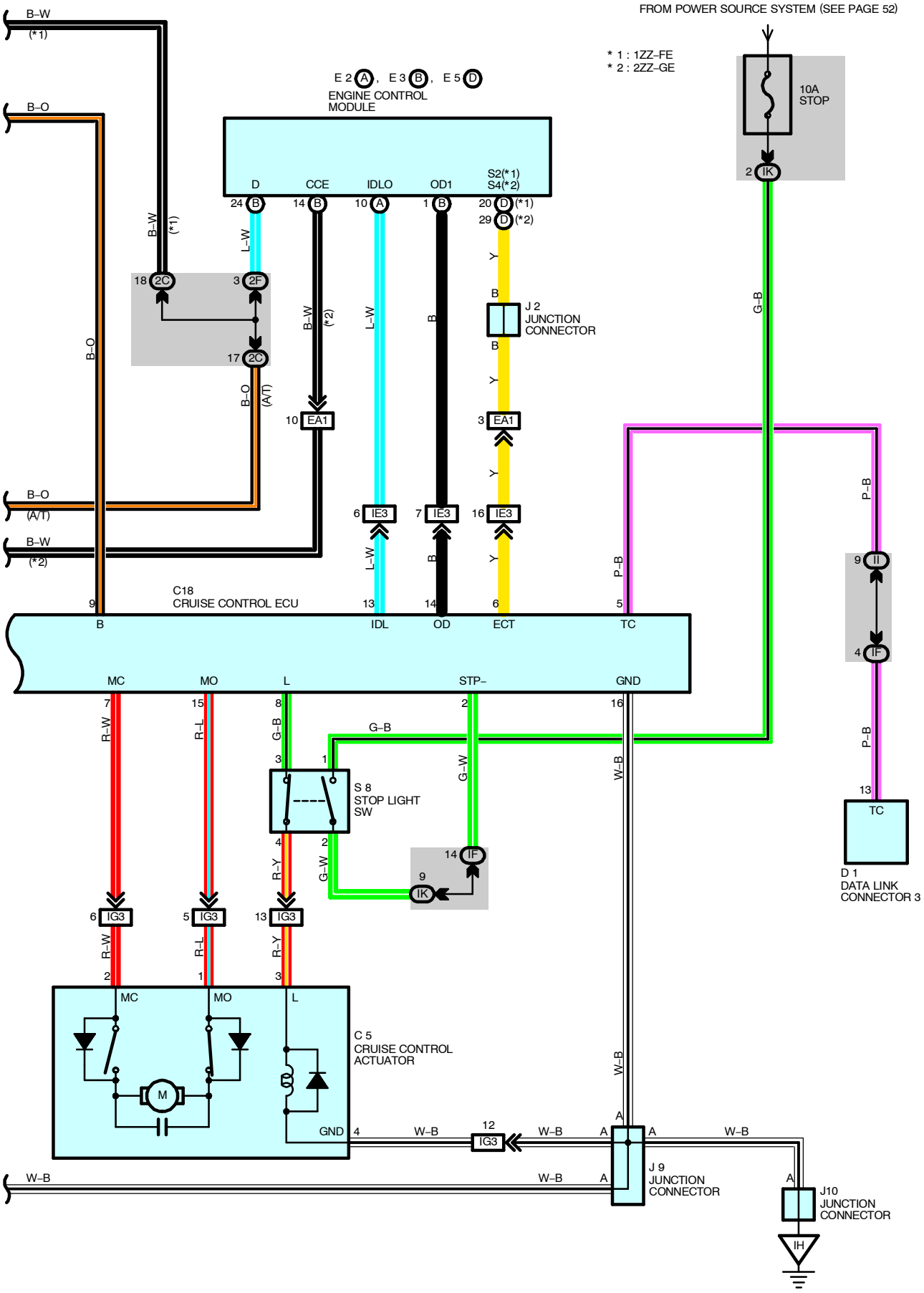
FROM POWER SOURCE SYSTEM (SEE PAGE 52)
* 1 : 1ZZ-FE
* 2 : 2ZZ-GE
10A
STOP
E 2 A , E 3 B , E 5 D
ENGINE CONTROL
MODULE
D
CCE
IDLO
OD1
S2(*1)
S4(*2)
J 2
JUNCTION
CONNECTOR
C18
CRUISE CONTROL ECU
B
IDL
OD
ECT
TC
MC
MO
L
STP–
GND
S 8
STOP LIGHT
SW
D 1
DATA LINK
CONNECTOR 3
C 5
CRUISE CONTROL
ACTUATOR
J 9
JUNCTION
CONNECTOR
J10
JUNCTION
CONNECTOR

SYSTEM OUTLINE

The cruise control system allows to travel at a constant speed, by the operation of the switch, without having to depress the accelerator pedal. In this system, the engine throttle valve opening angle is adjusted automatically to control the vehicle at a constant speed.

1. SET OPERATION

When the cruise control main SW is turned ON, the cruise control system enters into standby mode, and the indicator light in the combination meter is turned ON.

2. SET SPEED CONTROL

When the SET/COAST switch is operated while traveling with the main SW ON, the speed when the switch is operated to OFF (Switch released) is memorized, and the vehicle speed is controlled at that speed.

3. COAST CONTROL

When the SET/COAST switch is operated to ON, the motor in the actuator rotates the throttle valve until it is closed fully to decrease the vehicle speed, and the speed when the switch is operated to OFF is memorized, and the vehicle speed is controlled at that speed.
Furthermore, every time the SET/COAST switch is operated momentarily (Approximately 0.5 sec.) to ON, the memorized vehicle speed is decreased by approximately 1.5km/h.

4. ACCEL CONTROL

When the RESUME/ACCEL switch is operated to ON, the motor in the actuator rotates the throttle valve to open direction to increase the vehicle speed, and the speed when the switch is operated to OFF is memorized, and the vehicle speed is controlled at that speed.
Furthermore, every time the RESUME/ACCEL switch is operated momentarily (Approximately 0.5 sec.) to ON, the memorized vehicle speed is increased by approximately 1.5km/h.

5. MANUAL CANCEL MECHANISM

If any of the following signals are input during cruise control traveling, the cruise control is canceled.

(1) Stop lamp SW is ON (Brake pedal is depressed)

(2) Park/Neutral Position SW D circuit is turned from ON to OFF

(3) The CANCEL SW of the control SW is ON

(4) The Main SW is turned OFF

6. RESUME CONTROL

After canceling the cruise control (Except when the main SW is OFF) if the vehicle speed is above the minimum speed limit (Approximately 40km/h, 25mph), operating the RESUME/ACCEL switch from OFF to ON will cause the system to accelerate and resume to the vehicle speed before manual cancellation.

7. ELECTRONICALLY CONTROLLED TRANSMISSION CONTROL

During cruise control traveling, communication control is made to fix the electronically controlled transmission in normal pattern. However, in this case the indicator of the electronically controlled transmission does not change.

8. OVERDRIVE FUNCTION

While traveling with the cruise control, if the overdrive cut speed is reached on an upgrade hill, (Memorized speed minus 4km/h) the overdrive is released (O/D OFF) immediately.
This function increases the vehicle's traction so that the vehicle speed does not drop.

9. AUTO CANCEL OPERATION

If any of the following conditions are detected, the set speed is erased and the control is canceled.

(1) Disconnection or short in the Stop Light SW

(2) Abnormality in vehicle speed signal

(3) Abnormality in the actuator

(4) The actual vehicle speed becomes slower than the minimum speed limit

SERVICE HINTS

C16 CRUISE CONTROL SW [COMB. SW]

2–3 : Continuity with the MAIN SW on
2–3 : Approx. **1540** Ω with the CANCEL SW on
Approx. **630** Ω with the SET/COAST SW on
Approx. **240** Ω with the RESUME/ACCEL SW on

C18 CRUISE CONTROL ECU

9–GROUND : Approx. **12** volts with the ignition SW at **ON** position
12–GROUND : **4** pulses with **1** rotation of the rotor shaft
10–GROUND : Approx. **1540** Ω with the CANCEL SW on in the control SW
Approx. **630** Ω with the SET/COAST SW on in the control SW
Approx. **240** Ω with the RESUME/ACCEL SW on in the control SW
16–GROUND : Always continuity

: PARTS LOCATION

Code	See Page	Code	See Page	Code	See Page
C5	32 (1ZZ–FE)	E2 A	34 (2ZZ–GE)	J9	37
	34 (2ZZ–GE)	E3 B	32 (1ZZ–FE)	J10	37
C12	36		34 (2ZZ–GE)	P1	33 (1ZZ–FE)
C16	36	E5 D	32 (1ZZ–FE)		35 (2ZZ–GE)
C17	36		34 (2ZZ–GE)	S8	37
C18	36	J2	33 (1ZZ–FE)	V1	33 (1ZZ–FE)
D1	36		35 (2ZZ–GE)		35 (2ZZ–GE)
E2 A	32 (1ZZ–FE)	J8	37		

: JUNCTION BLOCK AND WIRE HARNESS CONNECTOR

Code	See Page	Junction Block and Wire Harness (Connector Location)
IB	25	Engine Room Main Wire and Instrument Panel J/B (Instrument Panel Brace RH)
IF	25	Instrument Panel Wire and Instrument Panel J/B (Instrument Panel Brace RH)
II		
IK		
IM		
2C	23	Engine Wire and Engine Room J/B (Engine Compartment Left)
2F	23	Engine Room Main Wire and Engine Room J/B (Engine Compartment Left)

: CONNECTOR JOINING WIRE HARNESS AND WIRE HARNESS

Code	See Page	Joining Wire Harness and Wire Harness (Connector Location)
EA1	40 (1ZZ–FE)	Engine Wire and Engine Room Main Wire (Inside of Engine Room R/B No.1)
	42 (2ZZ–GE)	
EA2	40 (1ZZ–FE)	
	42 (2ZZ–GE)	
IC1	44	Instrument Panel Wire and Instrument Panel No.2 Wire (Instrument Panel Reinforcement LH)
IE3	44	Engine Room Main Wire and Instrument Panel Wire (Instrument Panel Brace LH)
IE5		
IG3	46	Engine Room No.2 Wire and Instrument Panel Wire (Right Kick Panel)

: GROUND POINTS

Code	See Page	Ground Points Location
IH	44	Cowl Side Panel RH

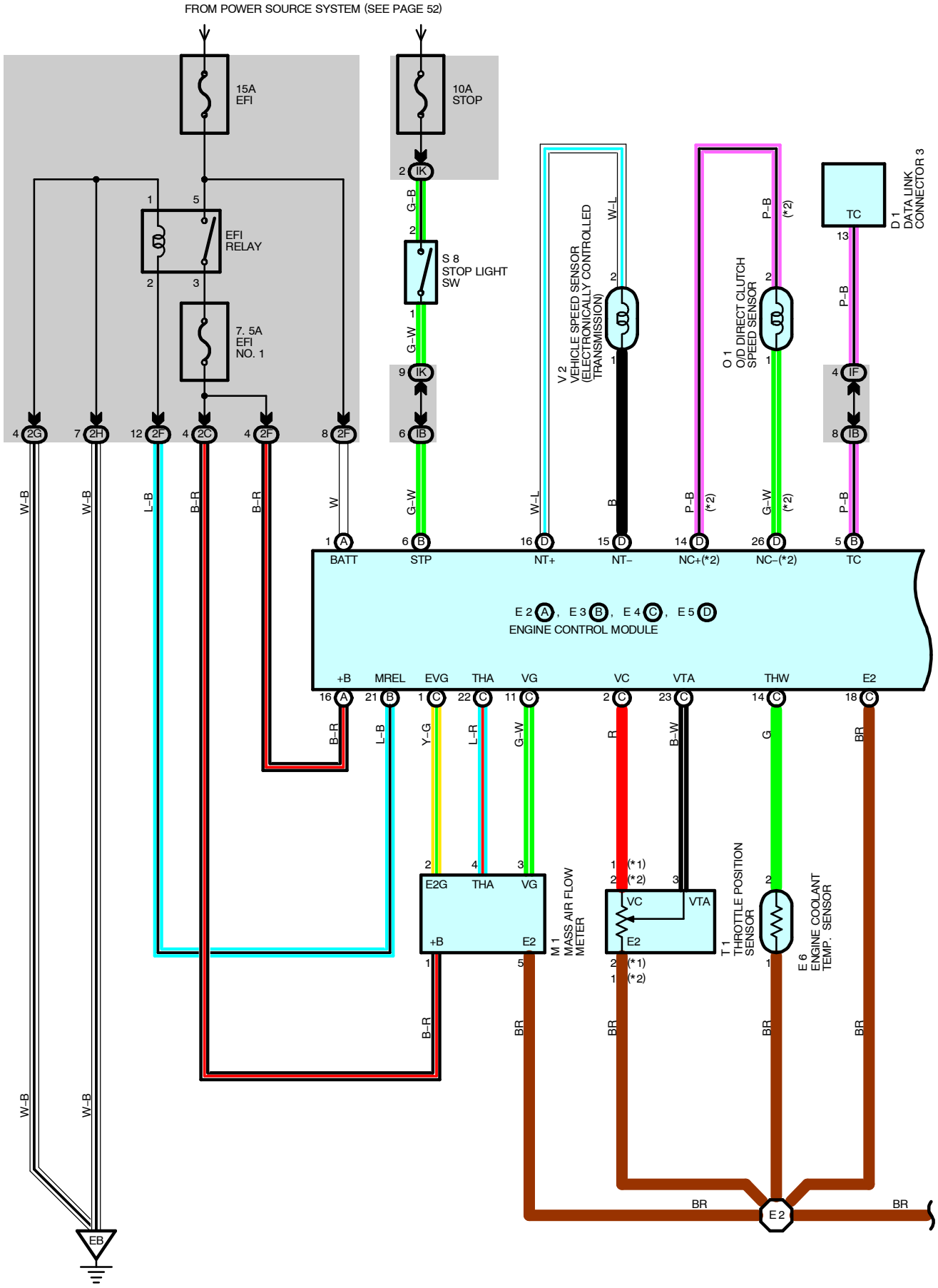
FROM POWER SOURCE SYSTEM (SEE PAGE 52)
15A EFI
10A STOP
EFI RELAY
7. 5A EFI NO. 1
S 8 STOP LIGHT SW
V 2 VEHICLE SPEED SENSOR (ELECTRONICALLY CONTROLLED TRANSMISSION)
O 1 O/D DIRECT CLUTCH SPEED SENSOR
D 1 DATA LINK CONNECTOR 3
TC
BATT
STP
NT+
NT–
NC+(*2)
NC–(*2)
E 2 A, E 3 B, E 4 C, E 5 D
ENGINE CONTROL MODULE
+B
MREL
EVG
THA
VG
VC
VTA
THW
E2
M 1 MASS AIR FLOW METER
T 1 THROTTLE POSITION SENSOR
E 6 ENGINE COOLANT TEMP. SENSOR
EB

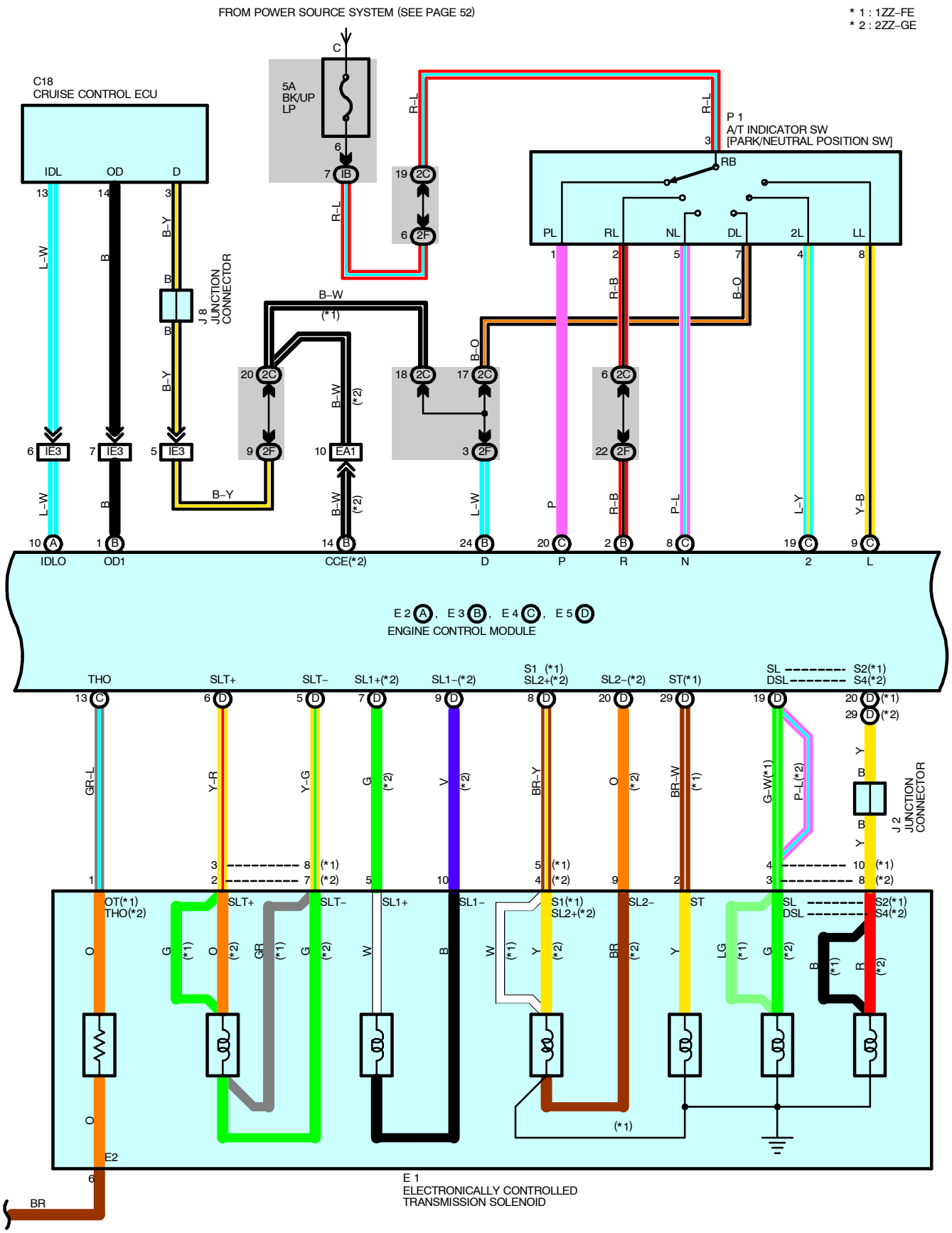
FROM POWER SOURCE SYSTEM (SEE PAGE 52)
* 1 : 1ZZ-FE
* 2 : 2ZZ-GE
C18
CRUISE CONTROL ECU
IDL
OD
D
5A
BK/UP
LP
P 1
A/T INDICATOR SW
[PARK/NEUTRAL POSITION SW]
RB
PL
RL
NL
DL
2L
LL
J 8
JUNCTION
CONNECTOR
IDLO
OD1
CCE(*2)
D
P
R
N
2
L
E 2 A, E 3 B, E 4 C, E 5 D
ENGINE CONTROL MODULE
THO
SLT+
SLT-
SL1+(*2)
SL1-(*2)
S1 (*1)
SL2+(*2)
SL2-(*2)
ST(*1)
SL
DSL
S2(*1)
S4(*2)
J 2
JUNCTION
CONNECTOR
OT(*1)
THO(*2)
SL1+
SL1-
S1(*1)
SL2+(*2)
SL2-
ST
E2
E 1
ELECTRONICALLY CONTROLLED
TRANSMISSION SOLENOID
BR

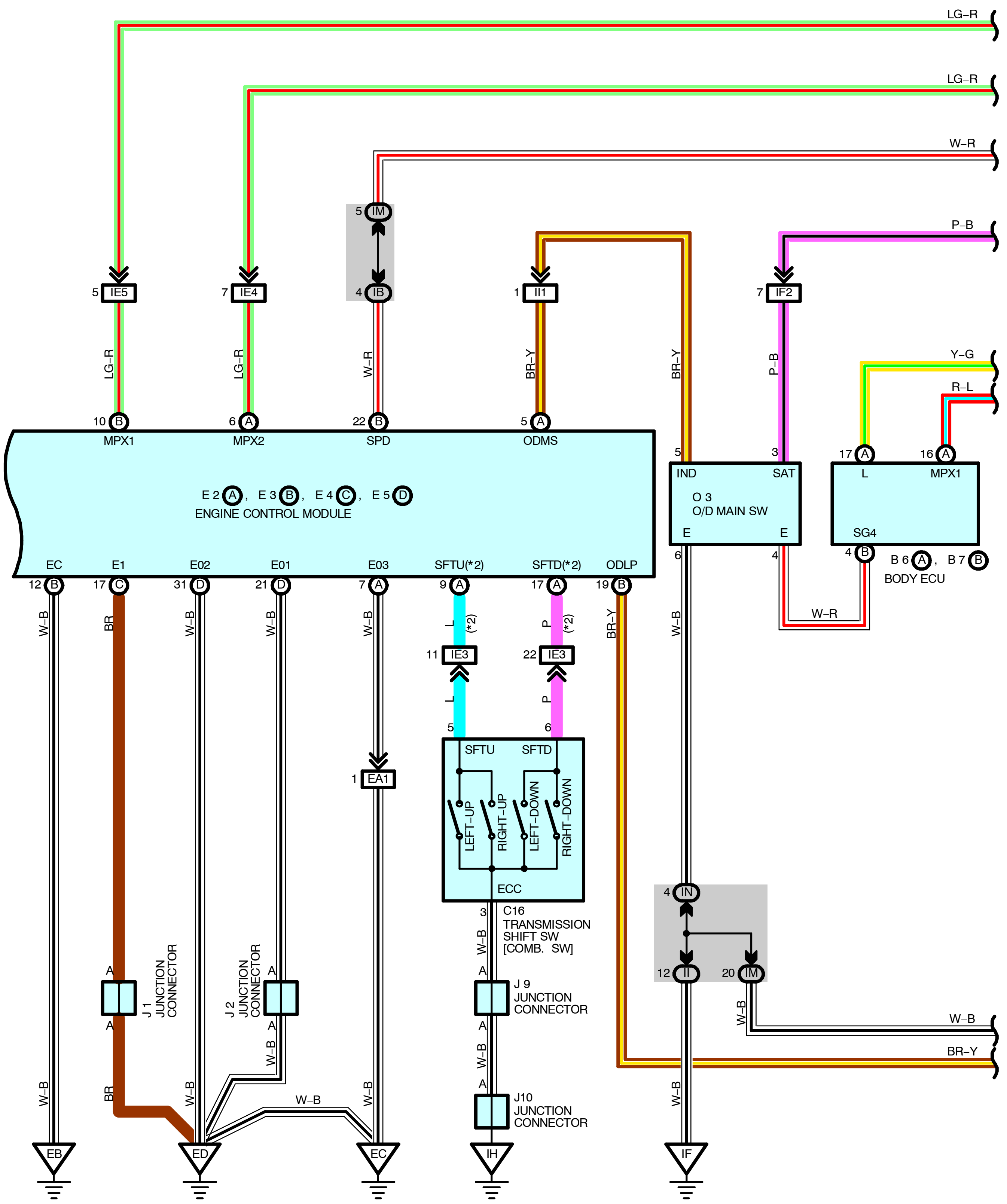
LG–R
LG–R
W–R
P–B
Y–G
R–L
5 IE5
7 IE4
5 IM
4 IB
1 II1
7 IF2
BR–Y
P–B
10 B MPX1
6 A MPX2
22 B SPD
5 A ODMS
E 2 A, E 3 B, E 4 C, E 5 D
ENGINE CONTROL MODULE
EC
E1
E02
E01
E03
SFTU(*2)
SFTD(*2)
ODLP
12 B
17 C
31 D
21 D
7 A
9 A
17 A
19 B
IND
SAT
O 3
O/D MAIN SW
E
E
L
MPX1
SG4
17 A
16 A
4 B
B 6 A, B 7 B
BODY ECU
W–R
W–B
BR
L
P
(*2)
11 IE3
22 IE3
SFTU
SFTD
LEFT–UP
RIGHT–UP
LEFT–DOWN
RIGHT–DOWN
ECC
C16
TRANSMISSION
SHIFT SW
[COMB. SW]
1 EA1
4 IN
12 II
20 IM
J 1
JUNCTION
CONNECTOR
J 2
JUNCTION
CONNECTOR
J 9
JUNCTION
CONNECTOR
J10
JUNCTION
CONNECTOR
EB
ED
EC
IH
IF

* 2 : 2ZZ–GE

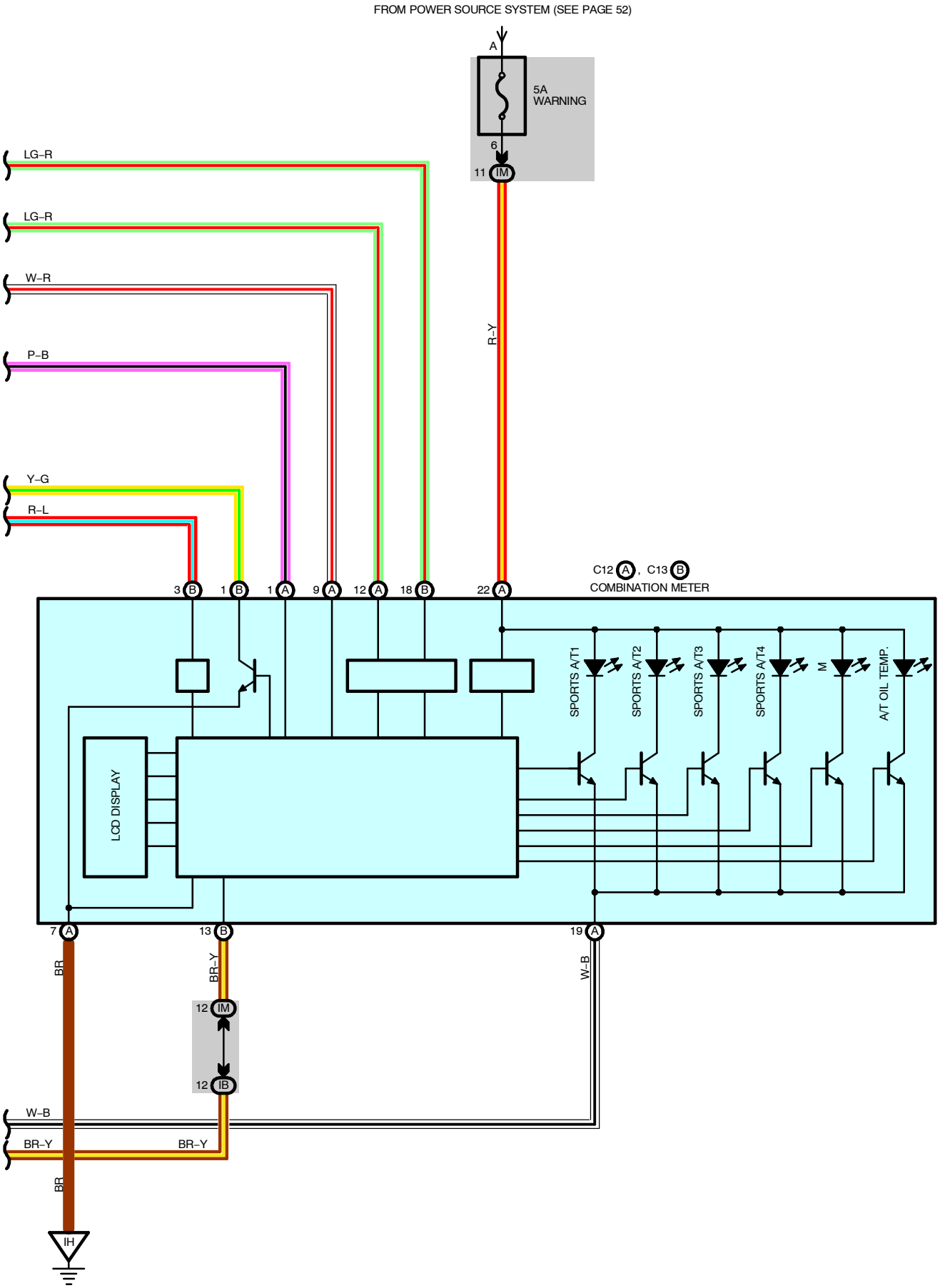
FROM POWER SOURCE SYSTEM (SEE PAGE 52)
A
5A
WARNING
6
11 IM
LG–R
LG–R
W–R
P–B
Y–G
R–L
R–Y
C12 A , C13 B
COMBINATION METER
3 B
1 B
1 A
9 A
12 A
18 B
22 A
SPORTS A/T1
SPORTS A/T2
SPORTS A/T3
SPORTS A/T4
M
A/T OIL TEMP.
LCD DISPLAY
7 A
13 B
19 A
BR
BR–Y
W–B
12 IM
12 IB
W–B
BR–Y
BR–Y
BR
IH

ELECTRONICALLY CONTROLLED TRANSMISSION AND A/T INDICATOR

SYSTEM OUTLINE

1. GEAR SHIFT OPERATION

When driving, the engine warm up condition is input as a signal to TERMINAL THW of the engine control module from the engine coolant temp. sensor and the vehicle speed signal from vehicle speed sensor is input to TERMINAL NT+ of the engine control module. At the same time, the throttle valve opening signal from the throttle position sensor is input to TERMINAL VTA of the engine control module as throttle angle signal.
Based on these signals, the engine control module selects the best shift position for the driving conditions and sends current to the electronically controlled transmission solenoid.

2. E–SHIFT SYSTEM (2ZZ–GE)

When the shift lever is set to the M position, the shift range can be switched with the UP or DOWN switch on the steering. (This limits to the maximum gear step and enables automatic shift–up and shift–down within the allowable range.)

SERVICE HINTS

E1 ELECTRONICALLY CONTROLLED TRANSMISSION SOLENOID

2–8 : **5.1–5.5** Ω
3–9 : **3.5–3.9** Ω
4–10 : **5.1–5.5** Ω
5, 6, 11, 12–GROUND : **11–15** Ω

V2 VEHICLE SPEED SENSOR (ELECTRONICALLY CONTROLLED TRANSMISSION)

1–2 : **560–680** Ω

O1 O/D DIRECT CLUTCH SPEED SENSOR

1–2 : **560–680** Ω

E3 (B), E5 (D) ENGINE CONTROL MODULE

BATT–E1 : Always approx. **12** volts
+B–E1 : Approx. **12** volts with ignition SW **ON** or **ST** position
MREL–E1 : Approx. **12** volts with ignition SW **ON** or **ST** position

P1 A/T INDICATOR LIGHT SW [PARK / NEUTRAL POSITION SW]

3–1 : Closed with shift lever in **P** position
3–2 : Closed with shift lever in **R** position
3–5 : Closed with shift lever in **N** position
3–7 : Closed with shift lever in **D** position
3–4 : Closed with shift lever in **2** position
3–8 : Closed with shift lever in **L** position

○ : PARTS LOCATION

Code		See Page	Code		See Page	Code	See Page
B6	A	36	E4	C	32 (1ZZ–FE)	M1	33 (1ZZ–FE)
B7	B	36			34 (2ZZ–GE)		35 (2ZZ–GE)
C12	A	36	E5	D	32 (1ZZ–FE)	O1	35 (2ZZ–GE)
C13	B	36			34 (2ZZ–GE)	O3	37
C16		36	E6		32 (1ZZ–FE)	P1	33 (1ZZ–FE)
C18		36			34 (2ZZ–GE)		35 (2ZZ–GE)
D1		36	J1		33 (1ZZ–FE)	S8	37
E1		32 (1ZZ–FE)			35 (2ZZ–GE)	T1	33 (1ZZ–FE)
		34 (2ZZ–GE)	J2		33 (1ZZ–FE)		35 (2ZZ–GE)
E2	A	32 (1ZZ–FE)			35 (2ZZ–GE)	V2	33 (1ZZ–FE)
		34 (2ZZ–GE)	J8		37		35 (2ZZ–GE)
E3	B	32 (1ZZ–FE)	J9		37		
		34 (2ZZ–GE)	J10		37		

: JUNCTION BLOCK AND WIRE HARNESS CONNECTOR

Code	See Page	Junction Block and Wire Harness (Connector Location)
IB	25	Engine Room Main Wire and Instrument Panel J/B (Instrument Panel Brace RH)
II	25	Instrument Panel Wire and Instrument Panel J/B (Instrument Panel Brace RH)
IK		
IM		
IN	25	Floor Wire and Instrument Panel J/B (Instrument Panel Brace RH)
2C	23	Engine Wire and Engine Room J/B (Engine Compartment Left)
2F	23	Engine Room Main Wire and Engine Room J/B (Engine Compartment Left)
2G		
2H		

: CONNECTOR JOINING WIRE HARNESS AND WIRE HARNESS

Code	See Page	Joining Wire Harness and Wire Harness (Connector Location)
EA1	40 (1ZZ–FE)	Engine Wire and Engine Room Main Wire (Inside of Engine Room R/B No.1)
	42 (2ZZ–GE)	
IE3	44	Engine Room Main Wire and Instrument Panel Wire (Instrument Panel Brace LH)
IE4		
IE5		
IF2	46	Floor Wire and Instrument Panel Wire (Instrument Panel Brace LH)
II1	46	Engine Room Main Wire and Floor Wire (Instrument Panel Brace LH)

: GROUND POINTS

Code	See Page	Ground Points Location
EB	40 (1ZZ–FE)	Front Left Fender
	42 (2ZZ–GE)	
EC	40 (1ZZ–FE)	Cylinder Head Cover LH
	42 (2ZZ–GE)	
ED	40 (1ZZ–FE)	
	42 (2ZZ–GE)	
IF	44	Instrument Panel Brace RH
IH	44	Cowl Side Panel RH

: SPLICE POINTS

Code	See Page	Wire Harness with Splice Points	Code	See Page	Wire Harness with Splice Points
E2	40 (1ZZ–FE)	Engine Wire	E2	42 (2ZZ–GE)	Engine Wire

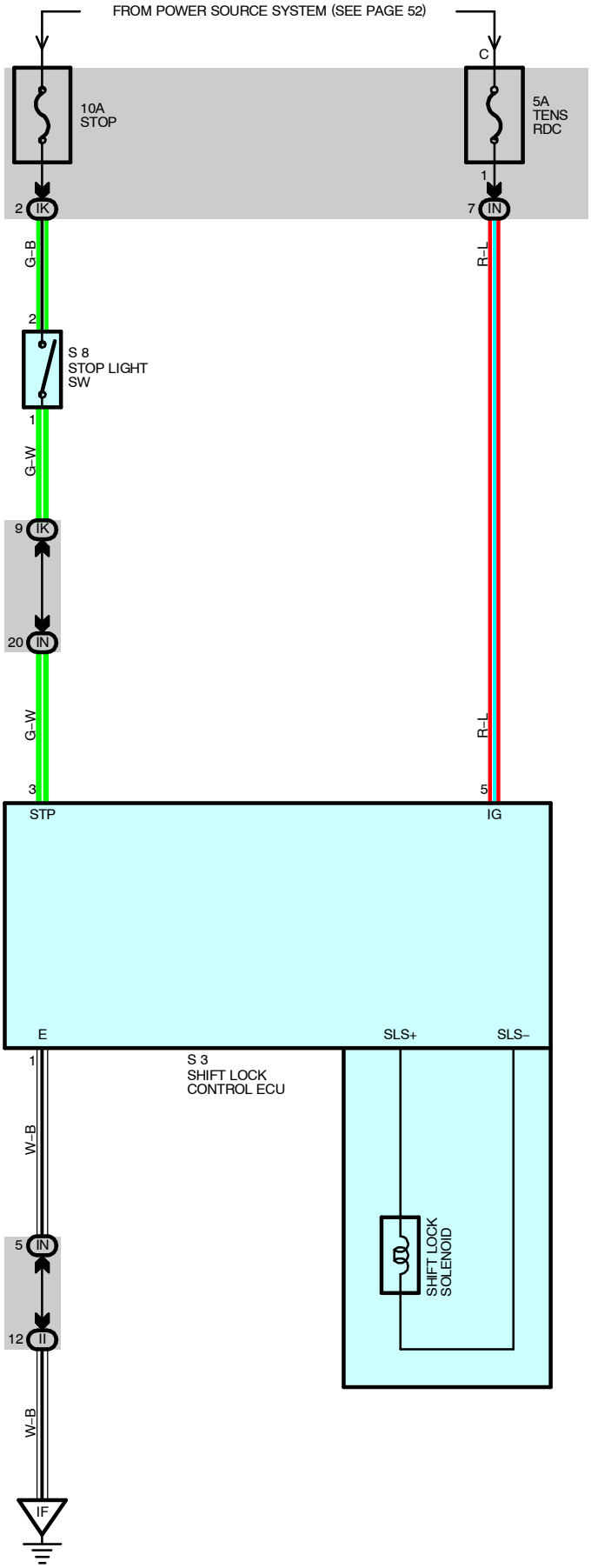
FROM POWER SOURCE SYSTEM (SEE PAGE 52)
C
10A
STOP
5A
TENS
RDC
1
2 IK
7 IN
G–B
R–L
2
S 8
STOP LIGHT
SW
1
G–W
9 IK
20 IN
G–W
R–L
3
5
STP
IG
E
SLS+
SLS–
S 3
SHIFT LOCK
CONTROL ECU
1
W–B
5 IN
12 II
W–B
SHIFT LOCK
SOLENOID
IF

SERVICE HINTS

S3 SHIFT LOCK CONTROL ECU

5–GROUND : Approx. **12** volts with the ignition SW at **ON** position
1–GROUND : Always continuity
3–GROUND : Approx. **12** volts with the brake pedal depressed

: PARTS LOCATION

Code	See Page	Code	See Page	Code	See Page
S3	37	S8	37		

: JUNCTION BLOCK AND WIRE HARNESS CONNECTOR

Code	See Page	Junction Block and Wire Harness (Connector Location)
II	25	Instrument Panel Wire and Instrument Panel J/B (Instrument Panel Brace RH)
IK		
IN	25	Floor Wire and Instrument Panel J/B (Instrument Panel Brace RH)

: GROUND POINTS

Code	See Page	Ground Points Location
IF	44	Instrument Panel Brace RH

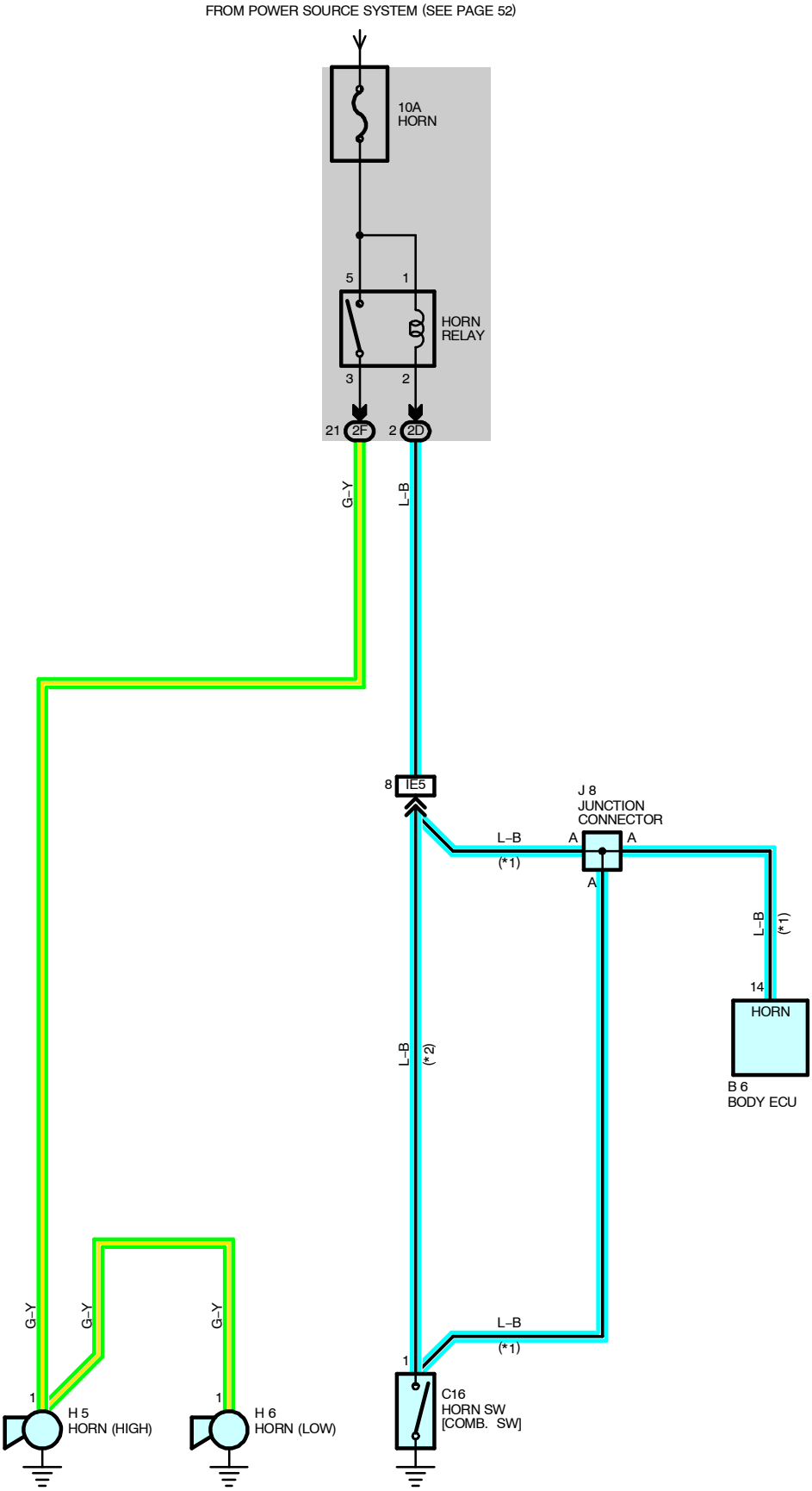
FROM POWER SOURCE SYSTEM (SEE PAGE 52)
10A
HORN
5
1
HORN
RELAY
3
2
21
2F
2
2D
G–Y
L–B
8
IE5
J 8
JUNCTION
CONNECTOR
L–B
(*1)
A
A
A
L–B
(*1)
14
HORN
B 6
BODY ECU
L–B
(*2)
G–Y
G–Y
G–Y
L–B
(*1)
1
1
1
H 5
HORN (HIGH)
H 6
HORN (LOW)
C16
HORN SW
[COMB. SW]

SERVICE HINTS

HORN RELAY

5–3 : Closed with the horn SW on

: PARTS LOCATION

Code	See Page	Code	See Page	Code	See Page
B6	36	H5	34 (2ZZ–GE)	J8	37
C16	36	H6	32 (1ZZ–FE)		
H5	32 (1ZZ–FE)		34 (2ZZ–GE)		

: JUNCTION BLOCK AND WIRE HARNESS CONNECTOR

Code	See Page	Junction Block and Wire Harness (Connector Location)
2D	23	Engine Room Main Wire and Engine Room J/B (Engine Compartment Left)
2F		

: CONNECTOR JOINING WIRE HARNESS AND WIRE HARNESS

Code	See Page	Joining Wire Harness and Wire Harness (Connector Location)
IE5	44	Engine Room Main Wire and Instrument Panel Wire (Instrument Panel Brace LH)

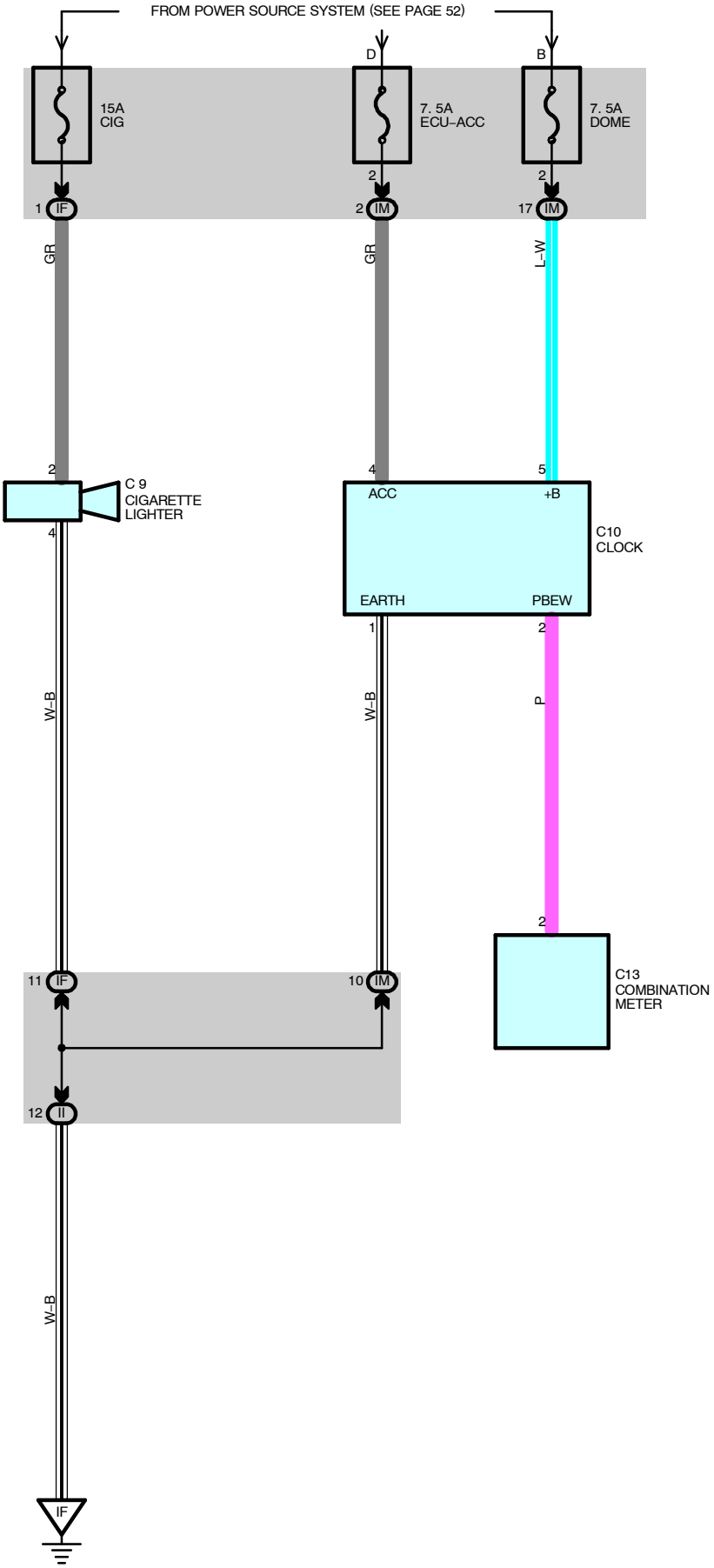
FROM POWER SOURCE SYSTEM (SEE PAGE 52)
D
B
15A
CIG
7. 5A
ECU–ACC
7. 5A
DOME
2
2
1 IF
2 IM
17 IM
GR
GR
L–W
2
4
5
C 9
CIGARETTE
LIGHTER
ACC
+B
C10
CLOCK
4
EARTH
PBEW
1
2
W–B
W–B
P
2
C13
COMBINATION
METER
11 IF
10 IM
12 II
W–B
IF

SERVICE HINTS

C9 CIGARETTE LIGHTER

2–GROUND : Approx. **12** volts with the ignition SW at **ACC** or **ON** position
4–GROUND : Always continuity

C10 CLOCK

5–GROUND : Always **12** volts (Power for clock)
4–GROUND : Approx. **12** volts with the ignition SW at **ACC** or **ON** position (Power for indication)
1–GROUND : Always continuity

: PARTS LOCATION

Code	See Page	Code	See Page	Code	See Page
C9	36	C10	36	C13	36

: JUNCTION BLOCK AND WIRE HARNESS CONNECTOR

Code	See Page	Junction Block and Wire Harness (Connector Location)
IF	25	Instrument Panel Wire and Instrument Panel J/B (Instrument Panel Brace RH)
II		
IM		

: GROUND POINTS

Code	See Page	Ground Points Location
IF	44	Instrument Panel Brace RH

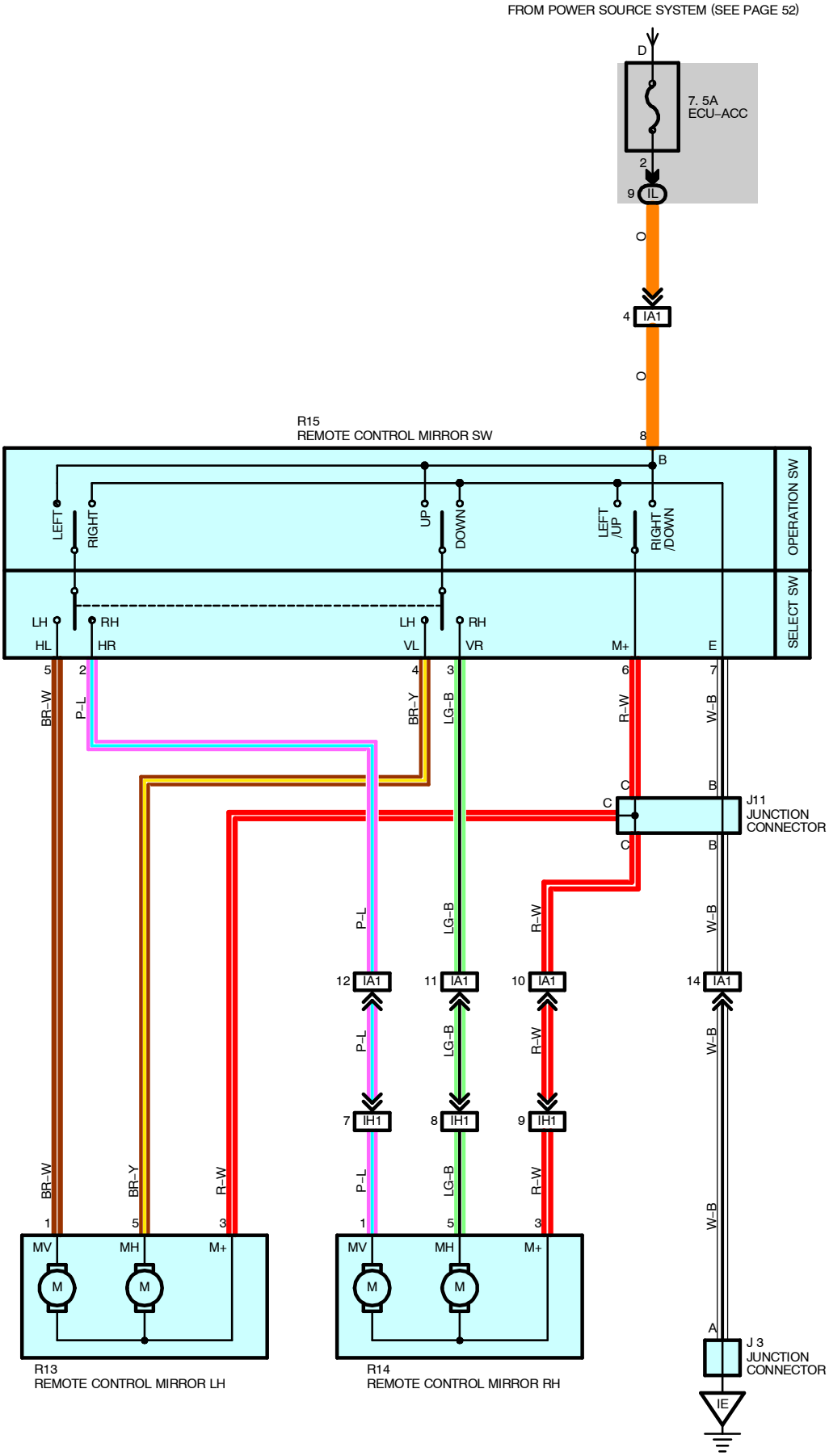
FROM POWER SOURCE SYSTEM (SEE PAGE 52)
D
7. 5A
ECU–ACC
2
9 IL
O
4 IA1
O
R15
REMOTE CONTROL MIRROR SW
8
B
LEFT
RIGHT
UP
DOWN
LEFT /UP
RIGHT /DOWN
OPERATION SW
SELECT SW
LH
RH
LH
RH
HL
HR
VL
VR
M+
E
5
2
4
3
6
7
BR–W
P–L
BR–Y
LG–B
R–W
W–B
C
B
J11
JUNCTION
CONNECTOR
12 IA1
11 IA1
10 IA1
14 IA1
7 IH1
8 IH1
9 IH1
1
5
3
MV
MH
M+
M
R13
REMOTE CONTROL MIRROR LH
R14
REMOTE CONTROL MIRROR RH
A
J 3
JUNCTION
CONNECTOR
IE

SERVICE HINTS

R15 REMOTE CONTROL MIRROR SW

8–GROUND : Approx. **12** volts with the ignition SW at **ACC** or **ON** position
6–7 : Continuity with the operation SW at **UP** or **LEFT** position
5–7 : Continuity with the operation SW at **RIGHT** position and the select SW at **LH** position
4–7 : Continuity with the operation SW at **DOWN** position and the select SW at **LH** position
2–7 : Continuity with the operation SW at **RIGHT** position and the select SW at **RH** position
3–7 : Continuity with the operation SW at **DOWN** position and the select SW at **RH** position

: PARTS LOCATION

Code	See Page	Code	See Page	Code	See Page
J3	37	R13	39	R15	39
J11	38	R14	39		

: JUNCTION BLOCK AND WIRE HARNESS CONNECTOR

Code	See Page	Junction Block and Wire Harness (Connector Location)
IL	25	Instrument Panel Wire and Instrument Panel J/B (Instrument Panel Brace RH)

: CONNECTOR JOINING WIRE HARNESS AND WIRE HARNESS

Code	See Page	Joining Wire Harness and Wire Harness (Connector Location)
IA1	44	Front Door LH Wire and Instrument Panel Wire (Left Kick Panel)
IH1	46	Front Door RH Wire and Instrument Panel Wire (Right Kick Panel)

: GROUND POINTS

Code	See Page	Ground Points Location
IE	44	Cowl Side Panel LH

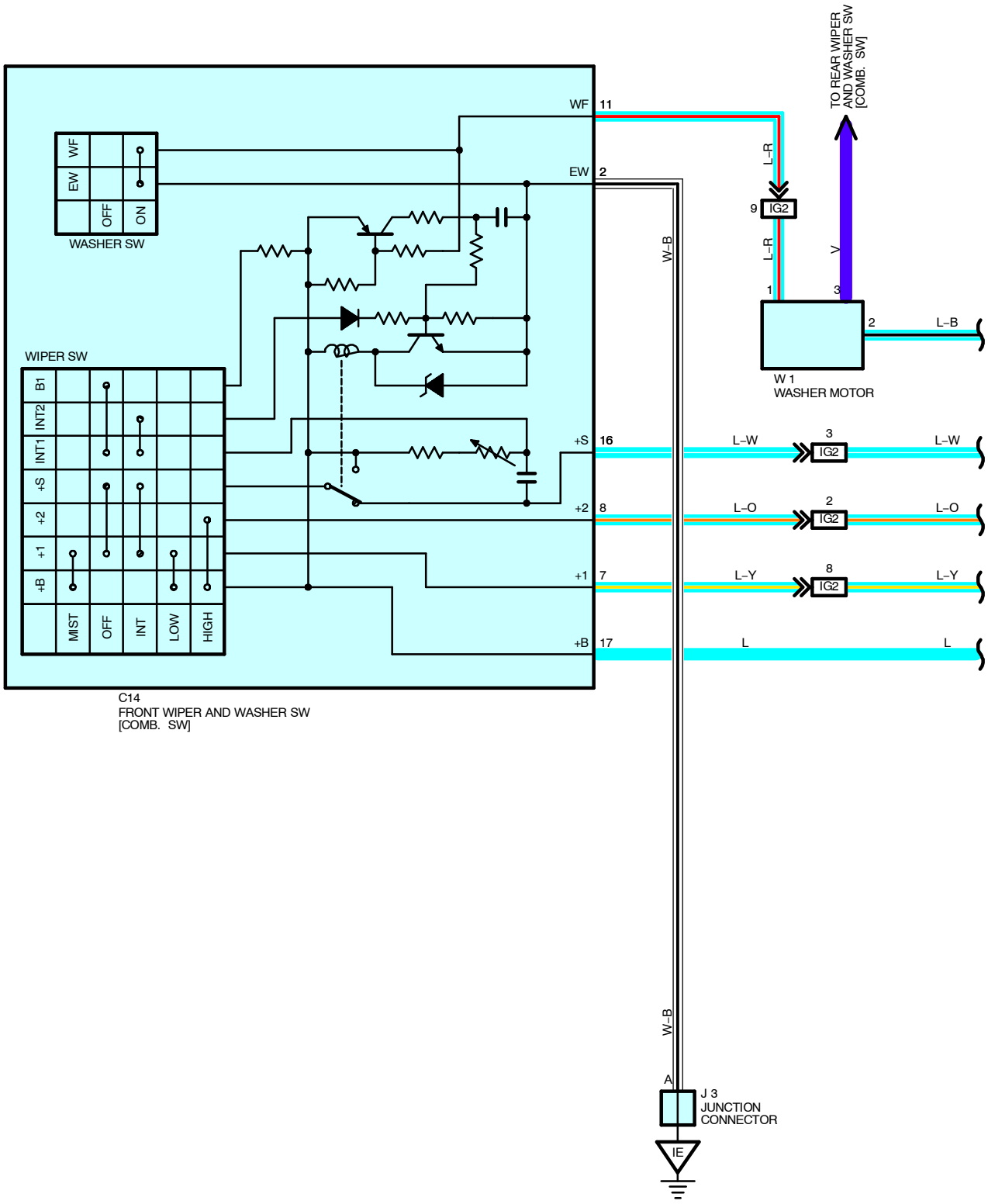
TO REAR WIPER AND WASHER SW [COMB. SW]
WF 11
EW 2
WF
EW
OFF
ON
WASHER SW
L–R
9 IG2
L–R
V
W–B
1
3
2
L–B
W 1
WASHER MOTOR
WIPER SW
B1
INT2
INT1
+S
+2
+1
+B
MIST
OFF
INT
LOW
HIGH
+S 16
L–W
3 IG2
L–W
+2 8
L–O
2 IG2
L–O
+1 7
L–Y
8 IG2
L–Y
+B 17
L
L
C14
FRONT WIPER AND WASHER SW
[COMB. SW]
W–B
A
J 3
JUNCTION
CONNECTOR
IE

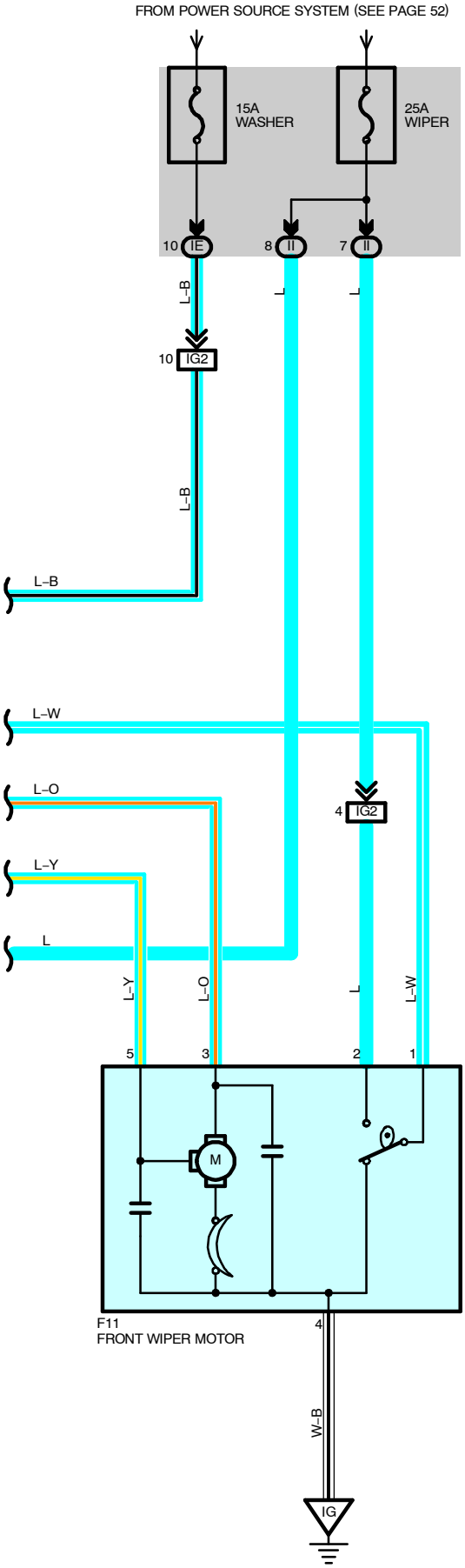
FROM POWER SOURCE SYSTEM (SEE PAGE 52)
15A
WASHER
25A
WIPER
10
IE
8
II
7
II
L–B
L
L
10
IG2
L–B
L–B
L–W
L–O
4
IG2
L–Y
L
L–Y
L–O
L
L–W
5
3
2
1
M
F11
FRONT WIPER MOTOR
4
W–B
IG

FRONT WIPER AND WASHER

SYSTEM OUTLINE

With the ignition SW turned on, current flows to TERMINAL 17 of the front wiper and washer SW, TERMINAL 2 of the wiper motor through the WIPER fuse and TERMINAL 2 of the washer motor through the WSH fuse.

1. LOW SPEED POSITION

With the wiper SW turned to LOW position, current flows from TERMINAL 17 of the front wiper and washer SW to TERMINAL 7 to TERMINAL 5 of the front wiper motor to wiper motor to TERMINAL 4 to GROUND, causing the front wiper motor to run at low speed.

2. HIGH SPEED POSITION

With the wiper SW turned to HIGH position, current flows from TERMINAL 17 of the front wiper and washer SW to TERMINAL 8 to TERMINAL 3 of the front wiper motor to wiper motor to TERMINAL 4 to GROUND, causing the front wiper motor to run at high speed.

3. INT POSITION

With the wiper SW turned to INT position, the relay operates and the current which is connected by relay function flows from TERMINAL 17 of the front wiper and washer SW to TERMINAL 2 to GROUND. This operates the intermittent circuit and current flows from TERMINAL 17 of the front wiper and washer SW to TERMINAL 7 to TERMINAL 5 of the front wiper motor to wiper motor to TERMINAL 4 to GROUND, and operating the wiper.
The intermittent operation is controlled by a condenser's charged and discharged function installed in the relay, and the intermittent time is controlled by a time control SW to change the charging time of the condenser.

4. MIST POSITION

With the wiper SW turned to MIST position, current flows from TERMINAL 17 of the front wiper and washer SW to front wiper mist SW to TERMINAL 2 to GROUND, and current flows from TERMINAL 17 to TERMINAL 7 to TERMINAL 5 of the wiper motor to wiper motor to TERMINAL 4 to GROUND, causing the front wiper motor to run at low speed.

5. WASHER CONTINUITY OPERATION

With the washer SW pushed to on, current flows from TERMINAL 2 of the washer motor to TERMINAL 1 to TERMINAL 11 of the front wiper and washer SW to TERMINAL 2 to GROUND, causing the washer motor to run, and the window washer emits a water spray. This causes current to flow to washer continuity operation circuit in TERMINAL 17 of the front wiper and washer SW to TERMINAL 7 to TERMINAL 5 of the front wiper motor to wiper motor to TERMINAL 4 to GROUND, operating the wiper.

SERVICE HINTS

C14 FRONT WIPER AND WASHER SW [COMB. SW]

2–GROUND : Always continuity
17–GROUND : Approx. **12** volts with the ignition SW at **ON** position
7–GROUND : Approx. **12** volts with the wiper and washer SW at **LOW** or **MIST** position
Approx. **12** volts **2** to **12** seconds intermittently with the wiper and washer SW at **INT** position
16–GROUND : Approx. **12** volts with the ignition SW on unless the wiper motor at **STOP** position
8–GROUND : Approx. **12** volts with the wiper and washer SW at **HIGH** position

F11 FRONT WIPER MOTOR

1–2 : Closed unless the wiper motor at **STOP** position

: PARTS LOCATION

Code	See Page	Code	See Page	Code	See Page
C14	36	F11	34 (2ZZ–GE)	W1	33 (1ZZ–FE)
F11	32 (1ZZ–FE)	J3	37		35 (2ZZ–GE)

: JUNCTION BLOCK AND WIRE HARNESS CONNECTOR

Code	See Page	Junction Block and Wire Harness (Connector Location)
IE	25	Instrument Panel Wire and Instrument Panel J/B (Instrument Panel Brace RH)
II		

: CONNECTOR JOINING WIRE HARNESS AND WIRE HARNESS

Code	See Page	Joining Wire Harness and Wire Harness (Connector Location)
IG2	46	Engine Room No.2 Wire and Instrument Panel Wire (Right Kick Panel)

▽ : GROUND POINTS

Code	See Page	Ground Points Location
IE	44	Cowl Side Panel LH
IG	44	Cowl Side Panel RH

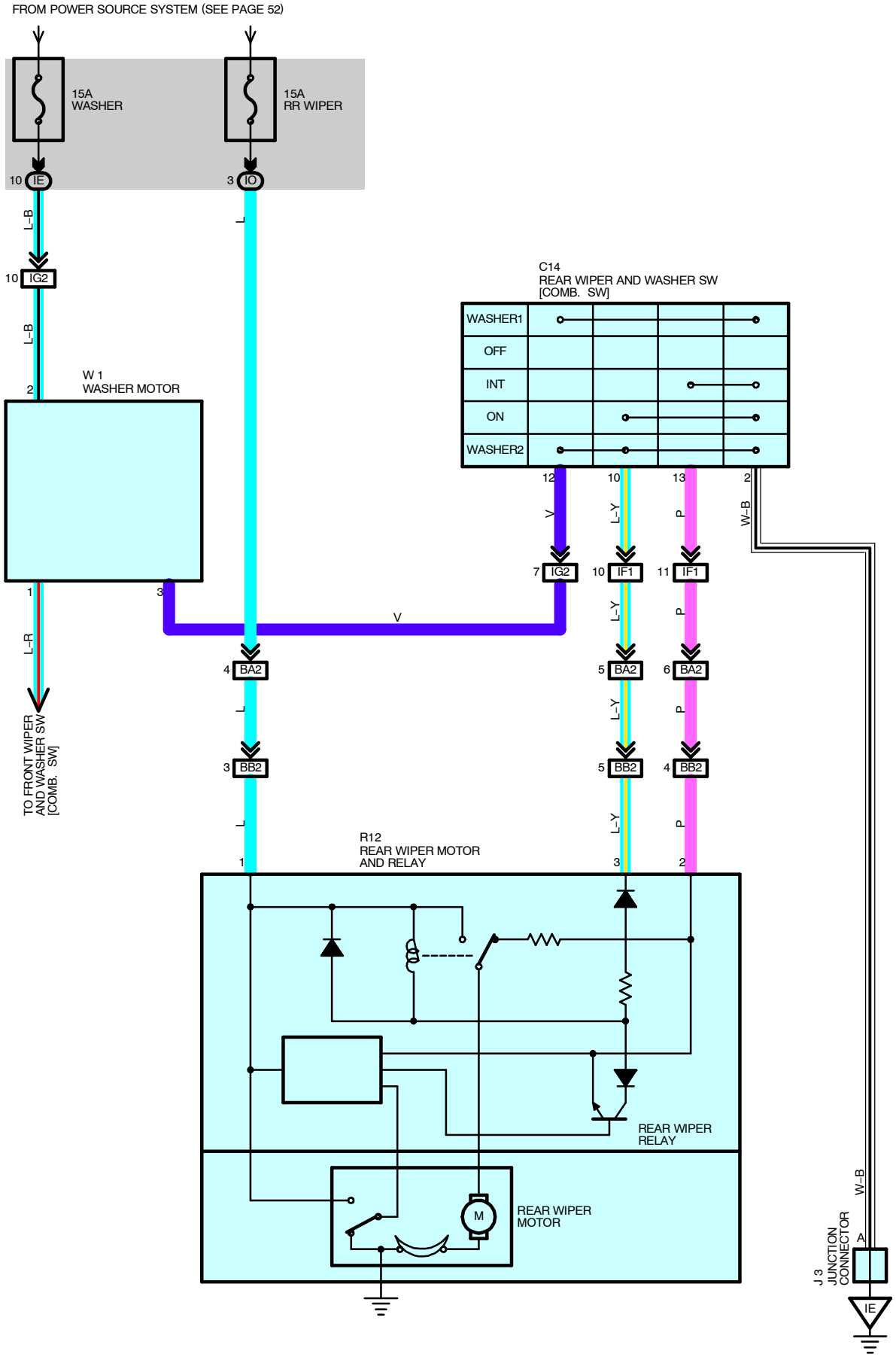
FROM POWER SOURCE SYSTEM (SEE PAGE 52)
15A
WASHER
15A
RR WIPER
10 IE
3 IO
L-B
L
10 IG2
L-B
2
W 1
WASHER MOTOR
C14
REAR WIPER AND WASHER SW
[COMB. SW]
WASHER1
OFF
INT
ON
WASHER2
12
10
13
2
V
L-Y
P
W-B
7 IG2
10 IF1
11 IF1
1
3
V
L-Y
P
L-R
4 BA2
5 BA2
6 BA2
L
L-Y
P
TO FRONT WIPER
AND WASHER SW
[COMB. SW]
3 BB2
5 BB2
4 BB2
L
L-Y
P
R12
REAR WIPER MOTOR
AND RELAY
1
3
2
REAR WIPER
RELAY
M
REAR WIPER
MOTOR
W-B
J 3
JUNCTION
CONNECTOR
A
IE

SYSTEM OUTLINE

When the ignition SW is turned on, current flows to TERMINAL 2 of the washer motor, TERMINAL 1 of the rear wiper motor and relay through the RR WIP fuse.

1. REAR WIPER NORMAL OPERATION

With the ignition SW turned on and rear wiper and washer SW turned on, current to TERMINAL 1 of the rear wiper motor and relay flows to TERMINAL 3 of the rear wiper motor and relay to TERMINAL 10 of the rear wiper and washer SW to TERMINAL 2 to GROUND. Thus, the relay coil is activated and current to the rear wiper motor to motor to GROUND, causing the motor to operate the wiper.

2. REAR WIPER INTERMITTENT OPERATION

When the ignition SW is turned on and the rear wiper and washer SW is turned to INT position, current to TERMINAL 1 of the rear wiper motor and relay flows to TERMINAL 2 of the rear wiper motor and relay to TERMINAL 13 of the rear wiper and washer SW to TERMINAL 2 to GROUND.
This causes the motor to operate (The point changes) and the intermittent circuit of the relay operates. Intermittent operation of the circuit is controlled by the charging and discharging of the condenser installed inside the relay.

3. WASHER OPERATION

With the ignition SW turned on and the rear wiper and washer SW turned to ON Position, when the wiper SW is turned further, current to TERMINAL 2 of the washer motor flows to TERMINAL 3 of the motor to TERMINAL 12 of the rear wiper and washer SW to TERMINAL 2 to GROUND so that the washer motor rotates and the window washer emits a water, only while the switch is fully turned.
When the wiper SW is off and then turned washer on (Wiper off side), the wiper SW is on and then turned to washer on (Wiper on side), only the washer operates.

SERVICE HINTS

W1 WASHER MOTOR

2–GROUND : Approx. **12** volts with the ignition SW at **ON** position
3–GROUND : Continuity with the washer SW turned on

R12 REAR WIPER MOTOR AND RELAY

1–GROUND : Approx. **12** volts with the ignition SW at **ON** position
2–GROUND : Continuity with the rear wiper and washer SW at **INT** position
3–GROUND : Continuity with the rear wiper and washer SW at **ON** position

: PARTS LOCATION

Code	See Page	Code	See Page	Code	See Page
C14	36	R12	39	W1	35 (2ZZ–GE)
J3	37	W1	33 (1ZZ–FE)		

: JUNCTION BLOCK AND WIRE HARNESS CONNECTOR

Code	See Page	Junction Block and Wire Harness (Connector Location)
IE	25	Instrument Panel Wire and Instrument Panel J/B (Instrument Panel Brace RH)
IO	25	Floor Wire and Instrument Panel J/B (Instrument Panel Brace RH)

: CONNECTOR JOINING WIRE HARNESS AND WIRE HARNESS

Code	See Page	Joining Wire Harness and Wire Harness (Connector Location)
IF1	46	Floor Wire and Instrument Panel Wire (Instrument Panel Brace LH)
IG2	46	Engine Room No.2 Wire and Instrument Panel Wire (Right Kick Panel)
BA2	48	Back Door No.1 Wire and Floor Wire (Quarter Panel LH)
BB2	48	Back Door No.2 Wire and Back Door No.1 Wire (Back Door Upper Left)

: GROUND POINTS

Code	See Page	Ground Points Location
IE	44	Cowl Side Panel LH

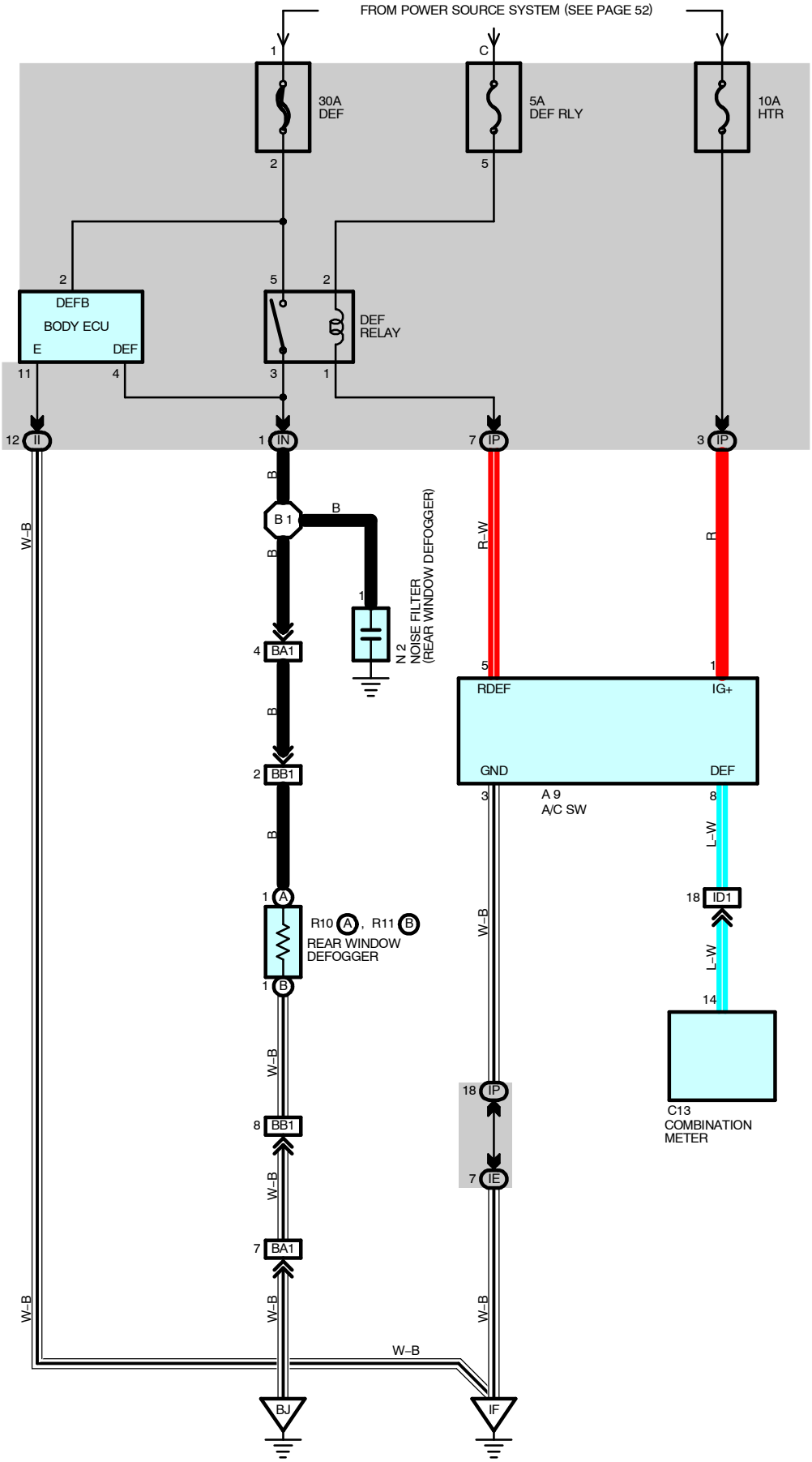
FROM POWER SOURCE SYSTEM (SEE PAGE 52)
30A
DEF
5A
DEF RLY
10A
HTR
DEFB
BODY ECU
E
DEF
DEF
RELAY
N 2
NOISE FILTER
(REAR WINDOW DEFOGGER)
RDEF
IG+
GND
DEF
A 9
A/C SW
R10
R11
REAR WINDOW
DEFOGGER
C13
COMBINATION
METER
W–B
R–W
L–W
BJ
IF

SERVICE HINTS

DEF RELAY

5–3 : Closed with the ignition SW at **ON** position and the defogger SW [A/C SW] on

A9 A/C SW

1–GROUND : Approx. **12** volts with the ignition SW at **ON** position
3–GROUND : Always continuity

: PARTS LOCATION

Code	See Page	Code		See Page	Code		See Page
A9	36	N2		39	R11	B	39
C13	36	R10	A	39			

: JUNCTION BLOCK AND WIRE HARNESS CONNECTOR

Code	See Page	Junction Block and Wire Harness (Connector Location)
IE	25	Instrument Panel Wire and Instrument Panel J/B (Instrument Panel Brace RH)
II		
IN	25	Floor Wire and Instrument Panel J/B (Instrument Panel Brace RH)
IP	25	Cowl No.2 Wire and Instrument Panel J/B (Instrument Panel Brace RH)

: CONNECTOR JOINING WIRE HARNESS AND WIRE HARNESS

Code	See Page	Joining Wire Harness and Wire Harness (Connector Location)
ID1	44	Cowl No.2 Wire and Instrument Panel Wire (Instrument Panel Brace LH)
BA1	48	Back Door No.1 Wire and Floor Wire (Quarter Panel LH)
BB1	48	Back Door No.2 Wire and Back Door No.1 Wire (Back Door Upper Left)

: GROUND POINTS

Code	See Page	Ground Points Location
IF	44	Instrument Panel Brace RH
BJ	48	Luggage Room Left

: SPLICE POINTS

Code	See Page	Wire Harness with Splice Points	Code	See Page	Wire Harness with Splice Points
B1	48	Floor Wire			

RADIO AND PLAYER (SEPARATE TYPE AMPLIFIER)

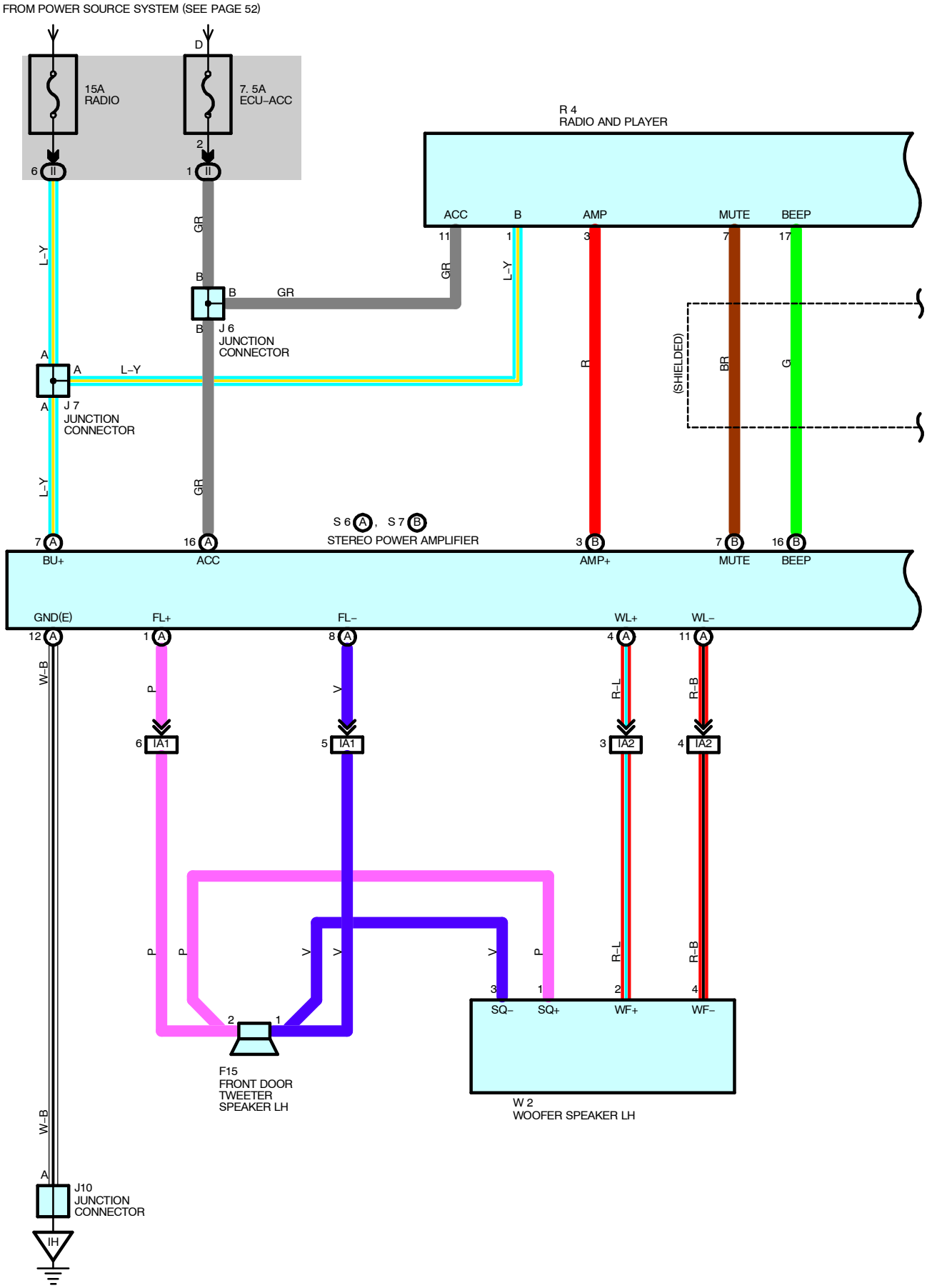

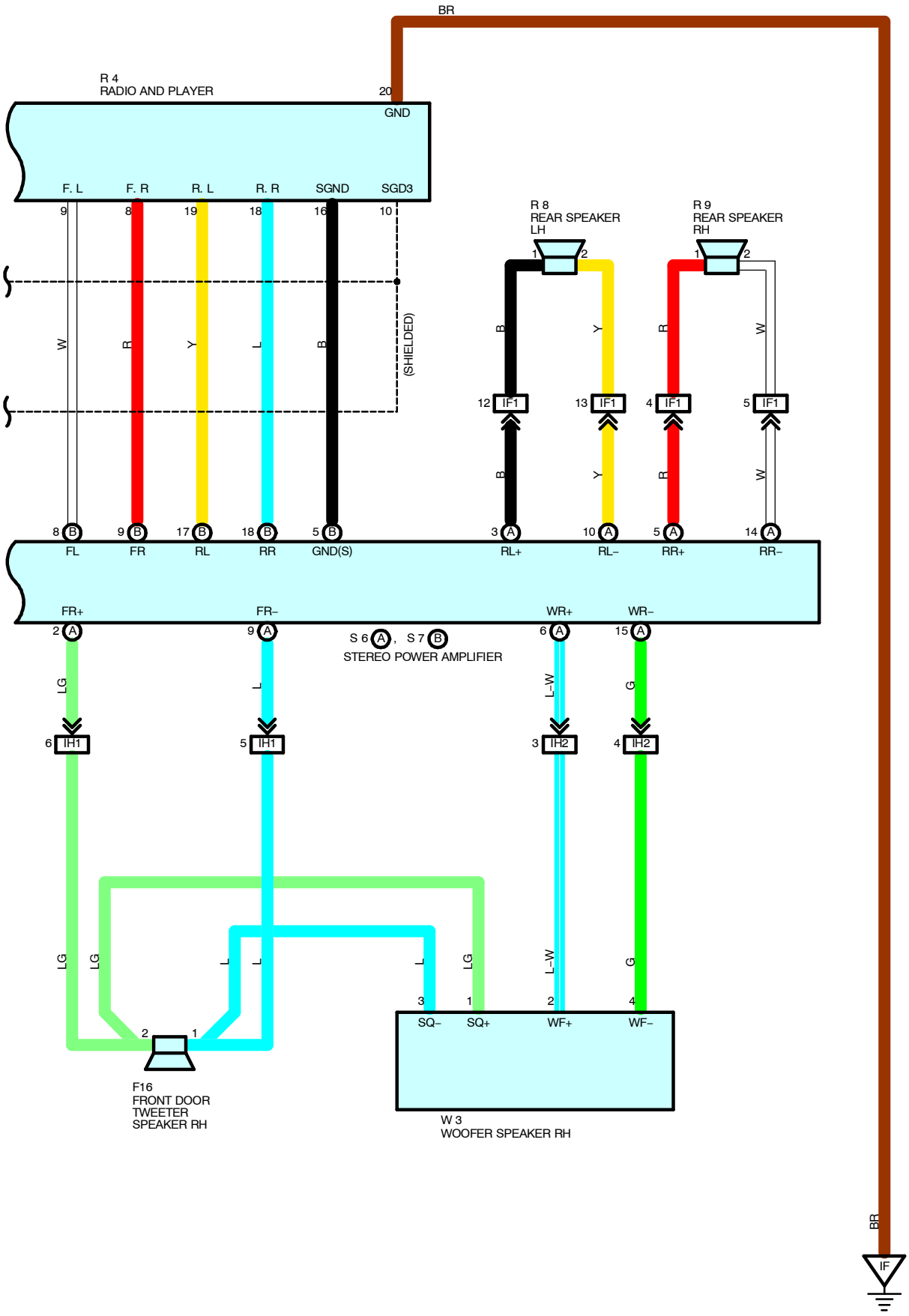
BR
R 4
RADIO AND PLAYER
20
GND
F. L
F. R
R. L
R. R
SGND
SGD3
9
8
19
18
16
10
W
R
Y
L
B
(SHIELDED)
R 8
REAR SPEAKER
LH
R 9
REAR SPEAKER
RH
1
2
B
Y
R
W
12 IF1
13 IF1
4 IF1
5 IF1
8 B
9 B
17 B
18 B
5 B
3 A
10 A
5 A
14 A
FL
FR
RL
RR
GND(S)
RL+
RL–
RR+
RR–
FR+
FR–
WR+
WR–
2 A
9 A
S 6 A , S 7 B
STEREO POWER AMPLIFIER
6 A
15 A
LG
L
L–W
G
6 IH1
5 IH1
3 IH2
4 IH2
LG
LG
L
L
L
LG
L–W
G
3
1
2
4
SQ–
SQ+
WF+
WF–
2
1
F16
FRONT DOOR
TWEETER
SPEAKER RH
W 3
WOOFER SPEAKER RH
BR
IF

RADIO AND PLAYER (SEPARATE TYPE AMPLIFIER)

SERVICE HINTS

S6 (A) STEREO POWER AMPLIFIER

(A)16–GROUND : Approx. **12** volts with the ignition SW at **ACC** or **ON** position
(A)12–GROUND : Always continuity
(A) 7–GROUND : Always approx. **12** volts

: PARTS LOCATION

Code	See Page	Code	See Page	Code		See Page
F15	38	J10	37	S6	A	37
F16	38	R4	37	S7	B	37
J6	37	R8	39	W2		39
J7	37	R9	39	W3		39

: JUNCTION BLOCK AND WIRE HARNESS CONNECTOR

Code	See Page	Junction Block and Wire Harness (Connector Location)
II	25	Instrument Panel Wire and Instrument Panel J/B (Instrument Panel Brace RH)

: CONNECTOR JOINING WIRE HARNESS AND WIRE HARNESS

Code	See Page	Joining Wire Harness and Wire Harness (Connector Location)
IA1	44	Front Door LH Wire and Instrument Panel Wire (Left Kick Panel)
IA2		
IF1	46	Floor Wire and Instrument Panel Wire (Instrument Panel Brace LH)
IH1	46	Front Door RH Wire and Instrument Panel Wire (Right Kick Panel)
IH2		

: GROUND POINTS

Code	See Page	Ground Points Location
IF	44	Instrument Panel Brace RH
IH	44	Cowl Side Panel RH

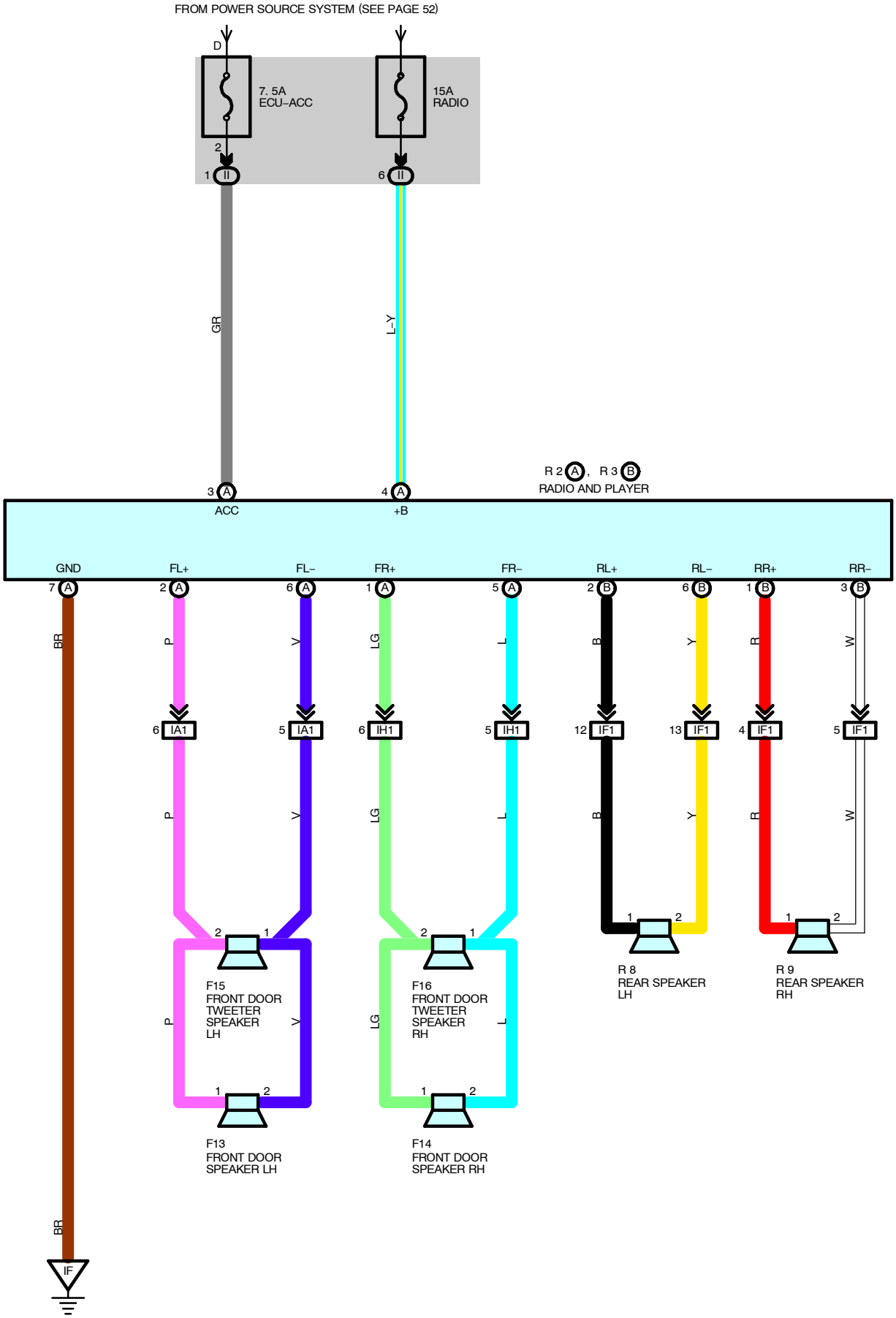
FROM POWER SOURCE SYSTEM (SEE PAGE 52)
D
7. 5A
ECU–ACC
15A
RADIO
GR
L–Y
R 2 A, R 3 B
RADIO AND PLAYER
ACC
+B
GND
FL+
FL–
FR+
FR–
RL+
RL–
RR+
RR–
BR
P
V
LG
L
B
Y
R
W
IA1
IH1
IF1
F15
FRONT DOOR
TWEETER
SPEAKER
LH
F16
FRONT DOOR
TWEETER
SPEAKER
RH
R 8
REAR SPEAKER
LH
R 9
REAR SPEAKER
RH
F13
FRONT DOOR
SPEAKER LH
F14
FRONT DOOR
SPEAKER RH
IF

SERVICE HINTS

R2 (A) RADIO AND PLAYER

(A) 4–GROUND : Always approx. **12** volts
(A) 3–GROUND : Approx. **12** volts with the ignition SW at **ACC** or **ON** position
(A) 7–GROUND : Always continuity

: PARTS LOCATION

Code	See Page	Code		See Page	Code	See Page
F13	38	F16		38	R8	39
F14	38	R2	A	37	R9	39
F15	38	R3	B	37		

: JUNCTION BLOCK AND WIRE HARNESS CONNECTOR

Code	See Page	Junction Block and Wire Harness (Connector Location)
II	25	Instrument Panel Wire and Instrument Panel J/B (Instrument Panel Brace RH)

: CONNECTOR JOINING WIRE HARNESS AND WIRE HARNESS

Code	See Page	Joining Wire Harness and Wire Harness (Connector Location)
IA1	44	Front Door LH Wire and Instrument Panel Wire (Left Kick Panel)
IF1	46	Floor Wire and Instrument Panel Wire (Instrument Panel Brace LH)
IH1	46	Front Door RH Wire and Instrument Panel Wire (Right Kick Panel)

: GROUND POINTS

Code	See Page	Ground Points Location
IF	44	Instrument Panel Brace RH

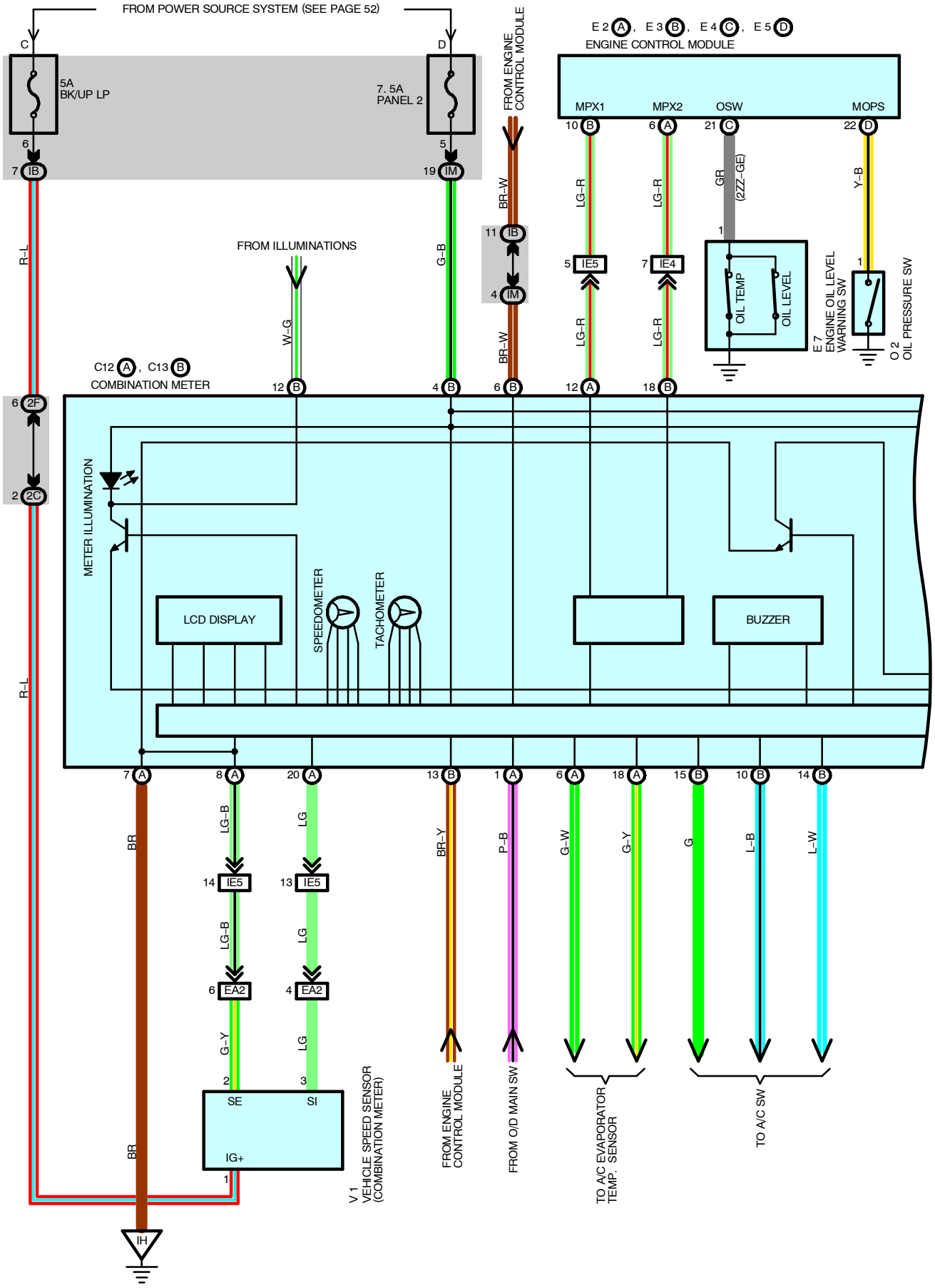
FROM POWER SOURCE SYSTEM (SEE PAGE 52)
5A
BK/UP LP
7. 5A
PANEL 2
FROM ENGINE
CONTROL MODULE
E 2 A, E 3 B, E 4 C, E 5 D
ENGINE CONTROL MODULE
MPX1
MPX2
OSW
MOPS
FROM ILLUMINATIONS
C12 A, C13 B
COMBINATION METER
METER ILLUMINATION
LCD DISPLAY
SPEEDOMETER
TACHOMETER
BUZZER
OIL TEMP
OIL LEVEL
(2ZZ-GE)
E 7
ENGINE OIL LEVEL
WARNING SW
O 2
OIL PRESSURE SW
V 1
VEHICLE SPEED SENSOR
(COMBINATION METER)
SE
SI
IG+
FROM ENGINE
CONTROL MODULE
FROM O/D MAIN SW
TO A/C EVAPORATOR
TEMP. SENSOR
TO A/C SW

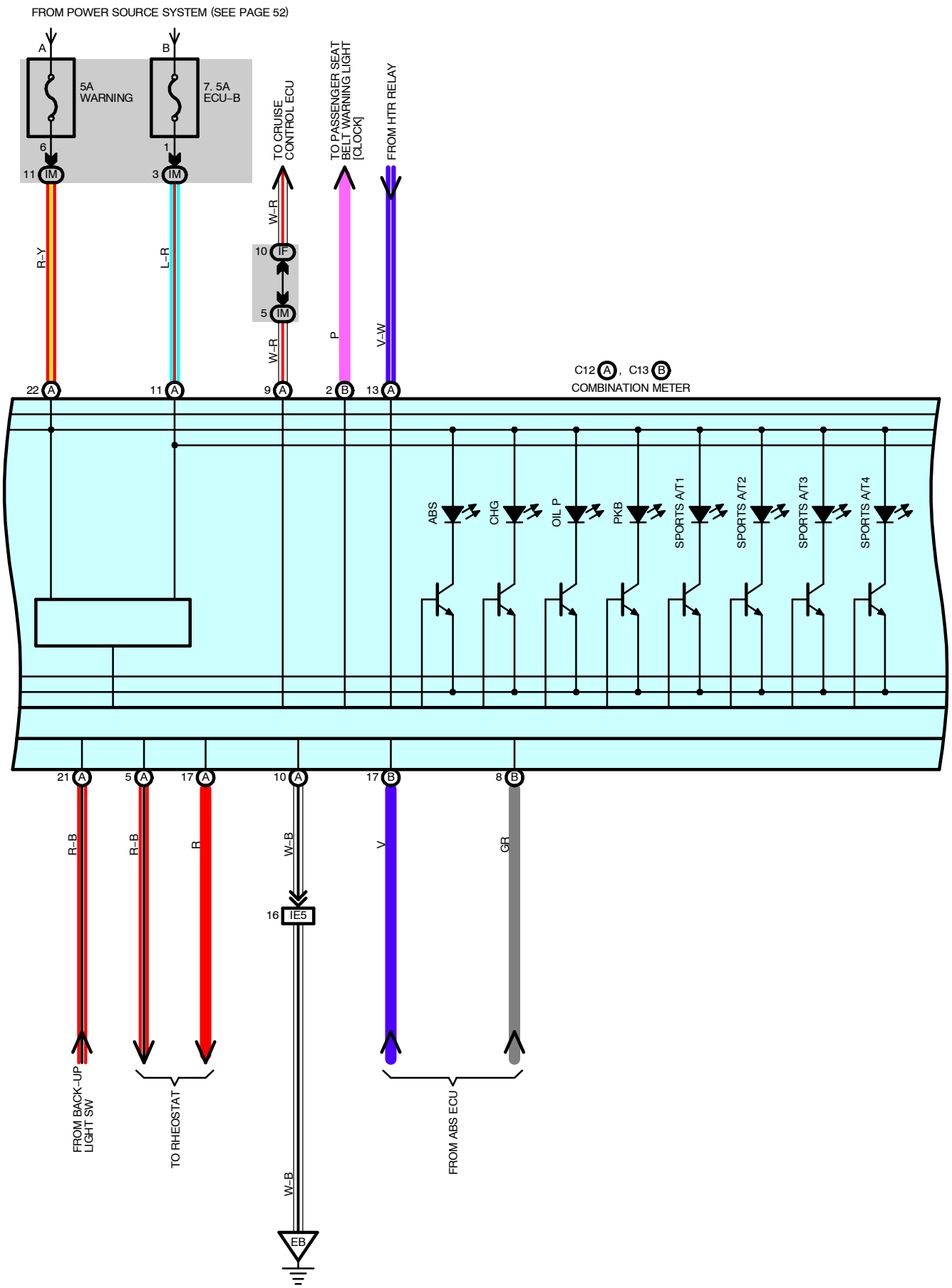
FROM POWER SOURCE SYSTEM (SEE PAGE 52)
A
B
5A
WARNING
7. 5A
ECU–B
6
1
11 IM
3 IM
R–Y
L–R
TO CRUISE
CONTROL ECU
W–R
10 IF
5 IM
W–R
TO PASSENGER SEAT
BELT WARNING LIGHT
[CLOCK]
P
FROM HTR RELAY
V–W
C12 A , C13 B
COMBINATION METER
22 A
11 A
9 A
2 B
13 A
ABS
CHG
OIL P
PKB
SPORTS A/T1
SPORTS A/T2
SPORTS A/T3
SPORTS A/T4
21 A
5 A
17 A
10 A
17 B
8 B
R–B
R–B
R
W–B
V
GR
16 IE5
FROM BACK–UP
LIGHT SW
TO RHEOSTAT
FROM ABS ECU
W–B
EB

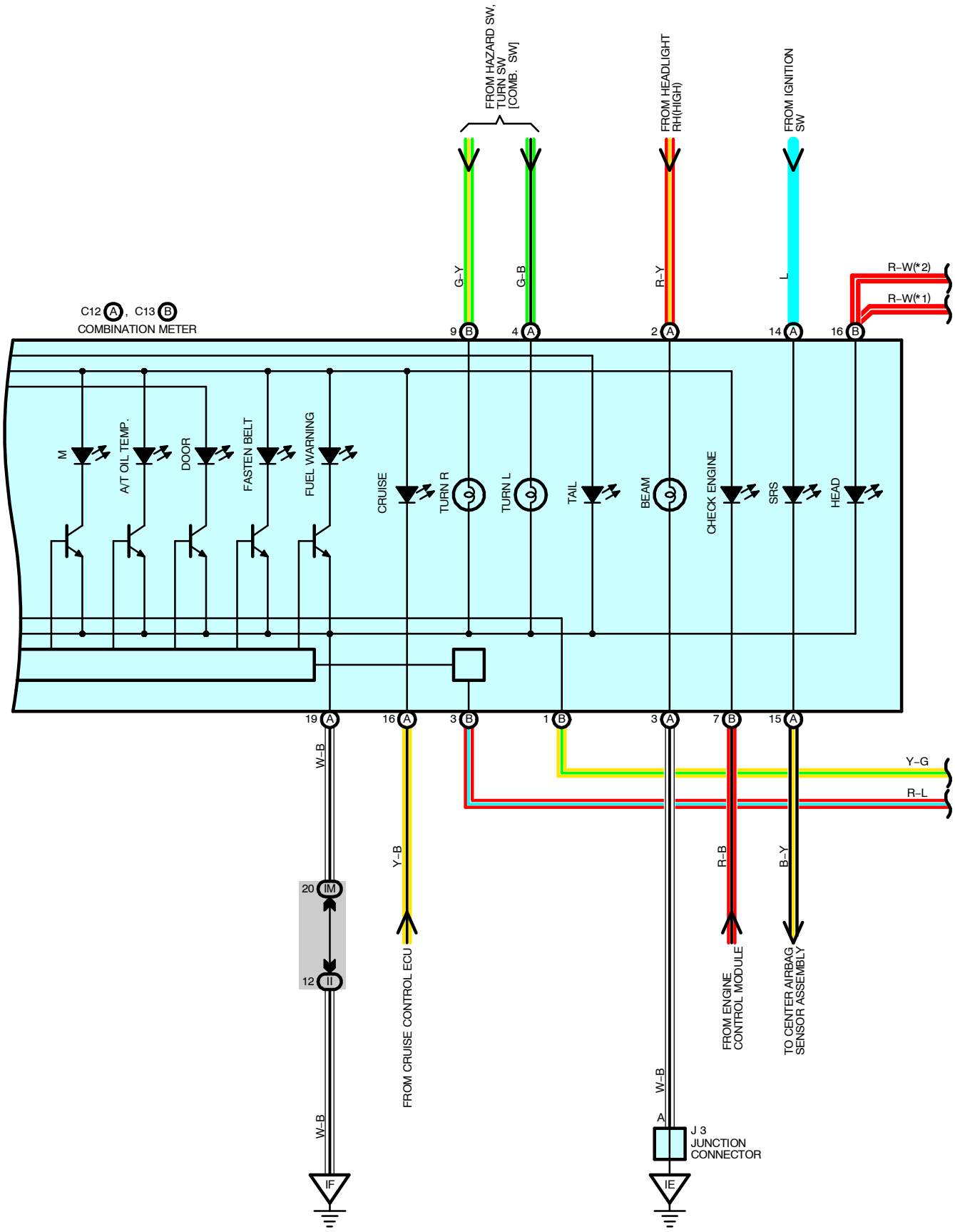
FROM HAZARD SW, TURN SW [COMB. SW]
FROM HEADLIGHT RH(HIGH)
FROM IGNITION SW
G–Y
G–B
R–Y
L
R–W(*2)
R–W(*1)
C12 A, C13 B
COMBINATION METER
9 B
4 A
2 A
14 A
16 B
M
A/T OIL TEMP.
DOOR
FASTEN BELT
FUEL WARNING
CRUISE
TURN R
TURN L
TAIL
BEAM
CHECK ENGINE
SRS
HEAD
19 A
16 A
3 B
1 B
3 A
7 B
15 A
W–B
Y–G
R–L
Y–B
R–B
B–Y
20 IM
12 II
FROM CRUISE CONTROL ECU
FROM ENGINE CONTROL MODULE
TO CENTER AIRBAG SENSOR ASSEMBLY
W–B
W–B
A
J 3
JUNCTION CONNECTOR
IF
IE

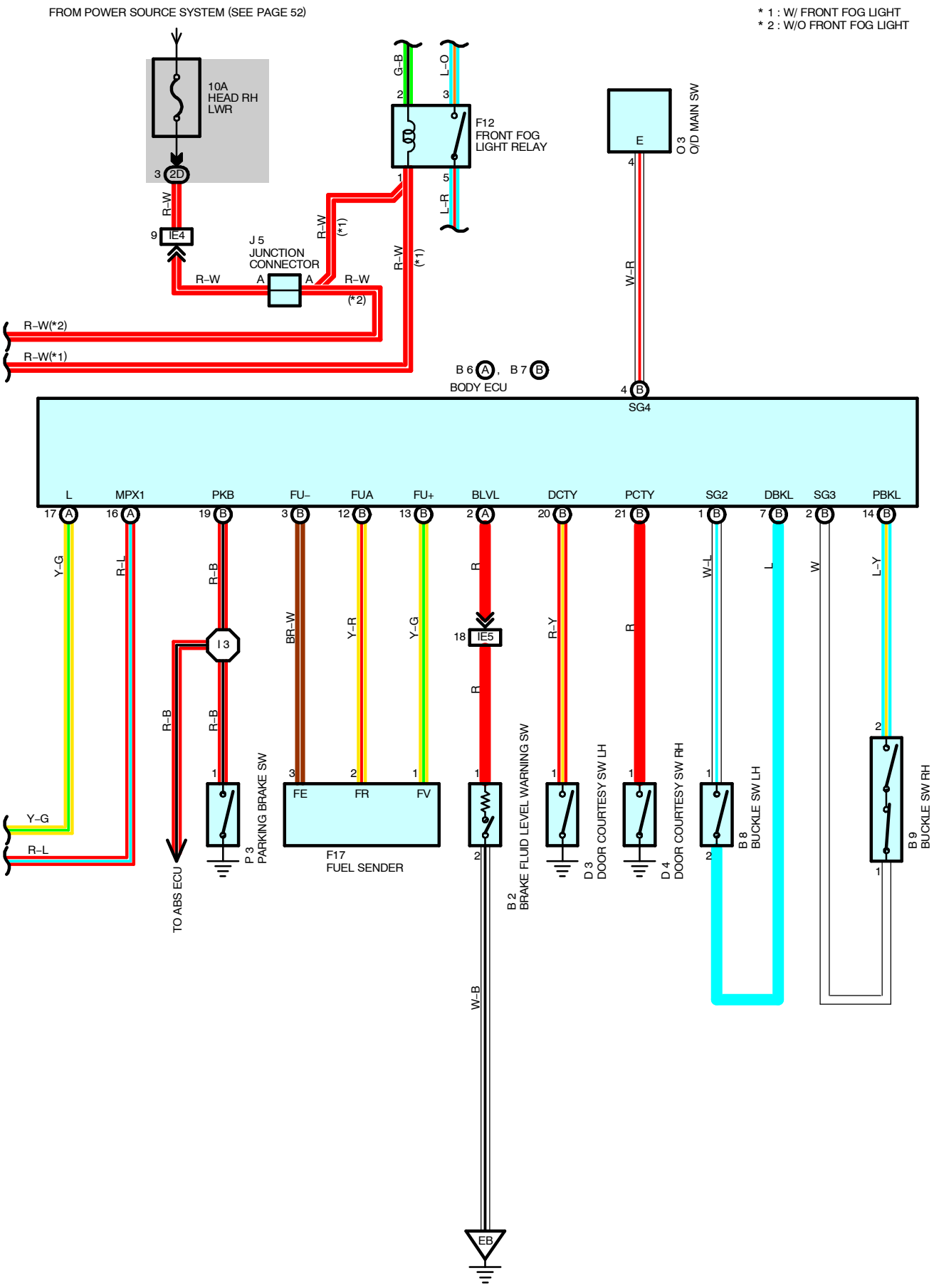
FROM POWER SOURCE SYSTEM (SEE PAGE 52)
* 1 : W/ FRONT FOG LIGHT
* 2 : W/O FRONT FOG LIGHT
10A
HEAD RH
LWR
2D
IE4
J 5
JUNCTION
CONNECTOR
F12
FRONT FOG
LIGHT RELAY
O 3
O/D MAIN SW
E
B 6 A, B 7 B
BODY ECU
SG4
L
MPX1
PKB
FU–
FUA
FU+
BLVL
DCTY
PCTY
SG2
DBKL
SG3
PBKL
I 3
IE5
P 3
PARKING BRAKE SW
TO ABS ECU
FE
FR
FV
F17
FUEL SENDER
B 2
BRAKE FLUID LEVEL WARNING SW
D 3
DOOR COURTESY SW LH
D 4
DOOR COURTESY SW RH
B 8
BUCKLE SW LH
B 9
BUCKLE SW RH
EB

COMBINATION METER

SERVICE HINTS

B2 BRAKE FLUID LEVEL WARNING SW

1–2 : Closed with the float down

P3 PARKING BRAKE SW

1–GROUND : Closed with the parking brake lever pulled up

O2 OIL PRESSURE SW

1–GROUND : Opened with the oil pressure above approx. **0.2** kgf/cm^2 (**2.8** psi, **19.6** kpa)

C12 (A) COMBINATION METER

(A)22–GROUND : Approx. **12** volts with the ignition SW at **ON** position
(A)11–GROUND : Always approx. **12** volts
(A) 3, (A) 7, (A) 10, (A) 19–GROUND : Always continuity

: PARTS LOCATION

Code		See Page	Code		See Page	Code	See Page
B2		32 (1ZZ–FE)	E2	A	32 (1ZZ–FE)	F17	38
		34 (2ZZ–GE)			34 (2ZZ–GE)	J3	37
B6	A	36	E3	B	32 (1ZZ–FE)	J5	37
B7	B	36			34 (2ZZ–GE)	O2	33 (1ZZ–FE)
B8		36	E4	C	32 (1ZZ–FE)		35 (2ZZ–GE)
B9		36			34 (2ZZ–GE)	O3	37
C12	A	36	E5	D	32 (1ZZ–FE)	P3	37
C13	B	36			34 (2ZZ–GE)	V1	33 (1ZZ–FE)
D3		38	E7		34 (2ZZ–GE)		35 (2ZZ–GE)
D4		38	F12		36		

: JUNCTION BLOCK AND WIRE HARNESS CONNECTOR

Code	See Page	Junction Block and Wire Harness (Connector Location)
IB	25	Engine Room Main Wire and Instrument Panel J/B (Instrument Panel Brace RH)
IF	25	Instrument Panel Wire and Instrument Panel J/B (Instrument Panel Brace RH)
II		
IM		
2C	23	Engine Wire and Engine Room J/B (Engine Compartment Left)
2D	23	Engine Room Main Wire and Engine Room J/B (Engine Compartment Left)
2F		

: CONNECTOR JOINING WIRE HARNESS AND WIRE HARNESS

Code	See Page	Joining Wire Harness and Wire Harness (Connector Location)
EA2	40 (1ZZ–FE)	Engine Wire and Engine Room Main Wire (Inside of Engine Room R/B No.1)
	42 (2ZZ–GE)	
IE4	44	Engine Room Main Wire and Instrument Panel Wire (Instrument Panel Brace LH)
IE5		

: GROUND POINTS

Code	See Page	Ground Points Location
EB	40 (1ZZ–FE)	Front Left Fender
	42 (2ZZ–GE)	
IE	44	Cowl Side Panel LH
IF	44	Instrument Panel Brace RH
IH	44	Cowl Side Panel RH

: SPLICE POINTS

Code	See Page	Wire Harness with Splice Points	Code	See Page	Wire Harness with Splice Points
I3	46	Floor Wire			

RADIATOR FAN AND CONDENSER FAN

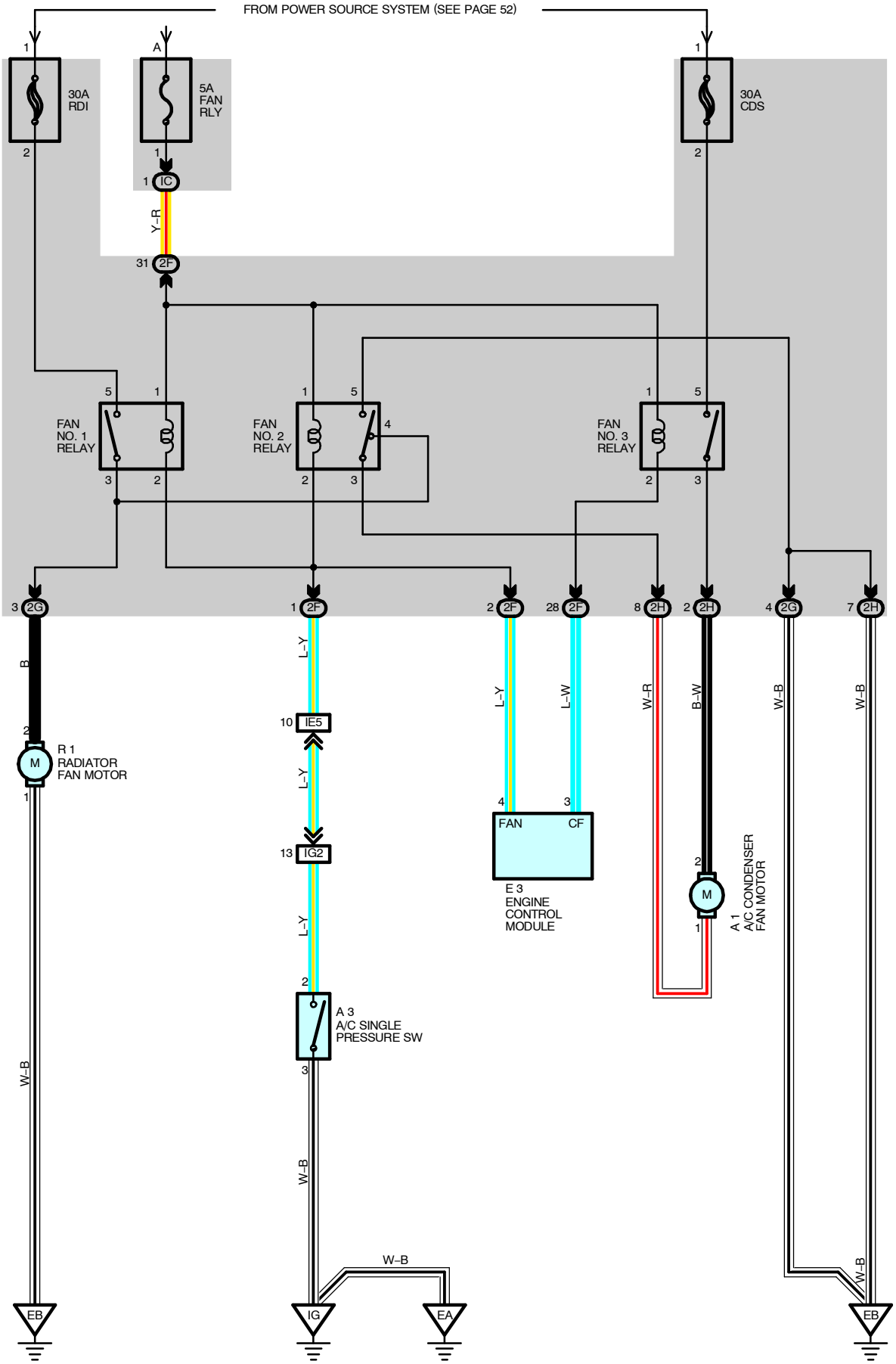

SYSTEM OUTLINE

Fan motor operation
The fan motor is operated according to the condition of the A/C operation, water temperature, or abnormality in the A/C system.

SERVICE HINTS

A3 A/C SINGLE PRESSURE SW

3–2 : Open above approx. **15.5** kgf/cm^2 (**220** psi, **1520** kpa)
Close below approx. **12.5** kgf/cm^2 (**178** psi, **1226** kpa)

○ : PARTS LOCATION

Code	See Page	Code	See Page	Code	See Page
A1	32 (1ZZ–FE)	A3	34 (2ZZ–GE)	R1	33 (1ZZ–FE)
	34 (2ZZ–GE)	E3	32 (1ZZ–FE)		35 (2ZZ–GE)
A3	32 (1ZZ–FE)		34 (2ZZ–GE)		

: JUNCTION BLOCK AND WIRE HARNESS CONNECTOR

Code	See Page	Junction Block and Wire Harness (Connector Location)
IC	25	Engine Room Main Wire and Instrument Panel J/B (Instrument Panel Brace RH)
2F	23	Engine Room Main Wire and Engine Room J/B (Engine Compartment Left)
2G		
2H		

: CONNECTOR JOINING WIRE HARNESS AND WIRE HARNESS

Code	See Page	Joining Wire Harness and Wire Harness (Connector Location)
IE5	44	Engine Room Main Wire and Instrument Panel Wire (Instrument Panel Brace LH)
IG2	46	Engine Room No.2 Wire and Instrument Panel Wire (Right Kick Panel)

▽ : GROUND POINTS

Code	See Page	Ground Points Location
EA	40 (1ZZ–FE)	Front Right Fender
	42 (2ZZ–GE)	
EB	40 (1ZZ–FE)	Front Left Fender
	42 (2ZZ–GE)	
IG	44	Cowl Side Panel RH

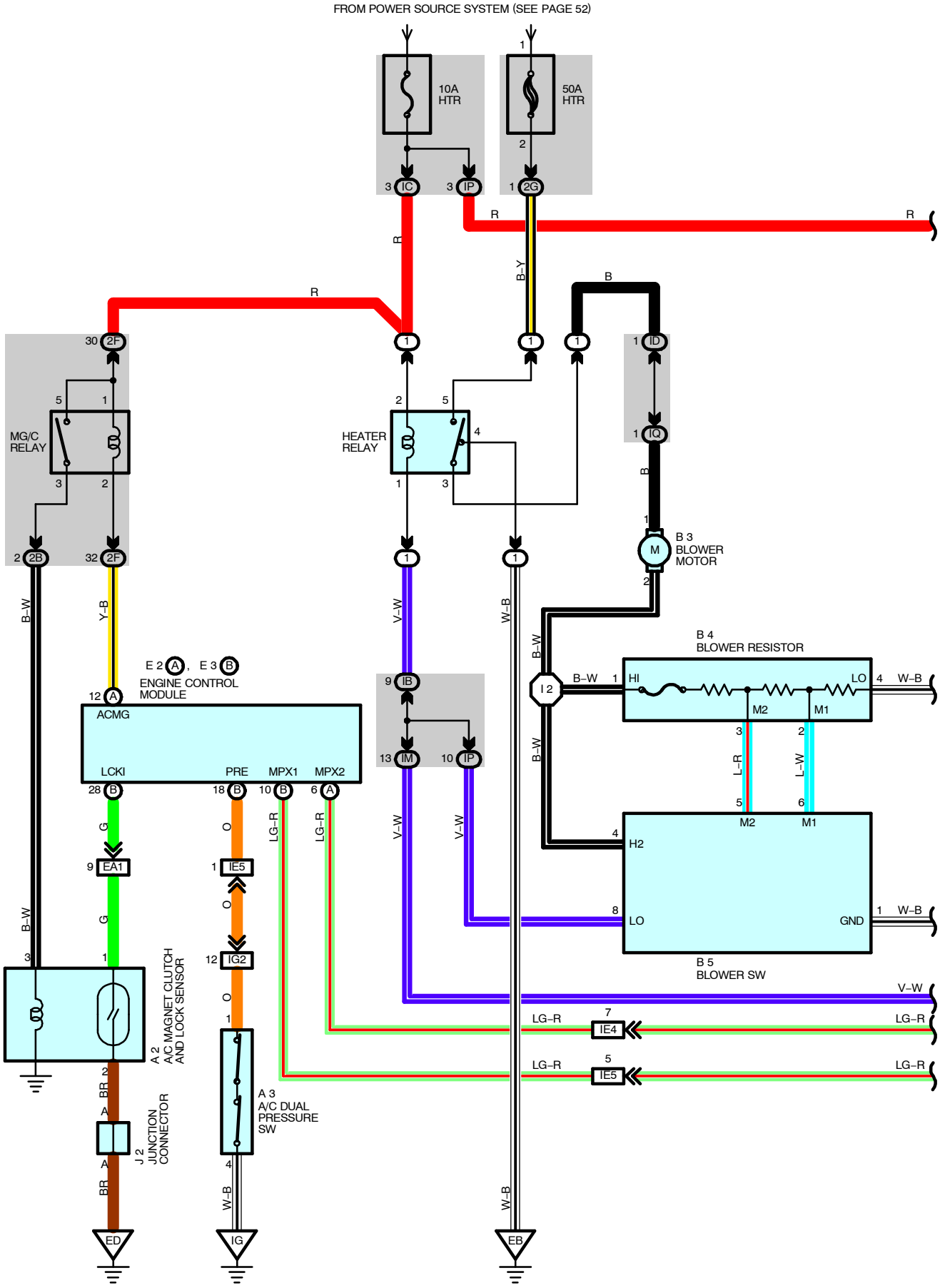
FROM POWER SOURCE SYSTEM (SEE PAGE 52)
10A HTR
50A HTR
MG/C RELAY
HEATER RELAY
B 3 BLOWER MOTOR
B 4 BLOWER RESISTOR
E 2 A, E 3 B
ENGINE CONTROL MODULE
ACMG
LCKI
PRE
MPX1
MPX2
B 5 BLOWER SW
A 2 A/C MAGNET CLUTCH AND LOCK SENSOR
J 2 JUNCTION CONNECTOR
A 3 A/C DUAL PRESSURE SW
ED
IG
EB

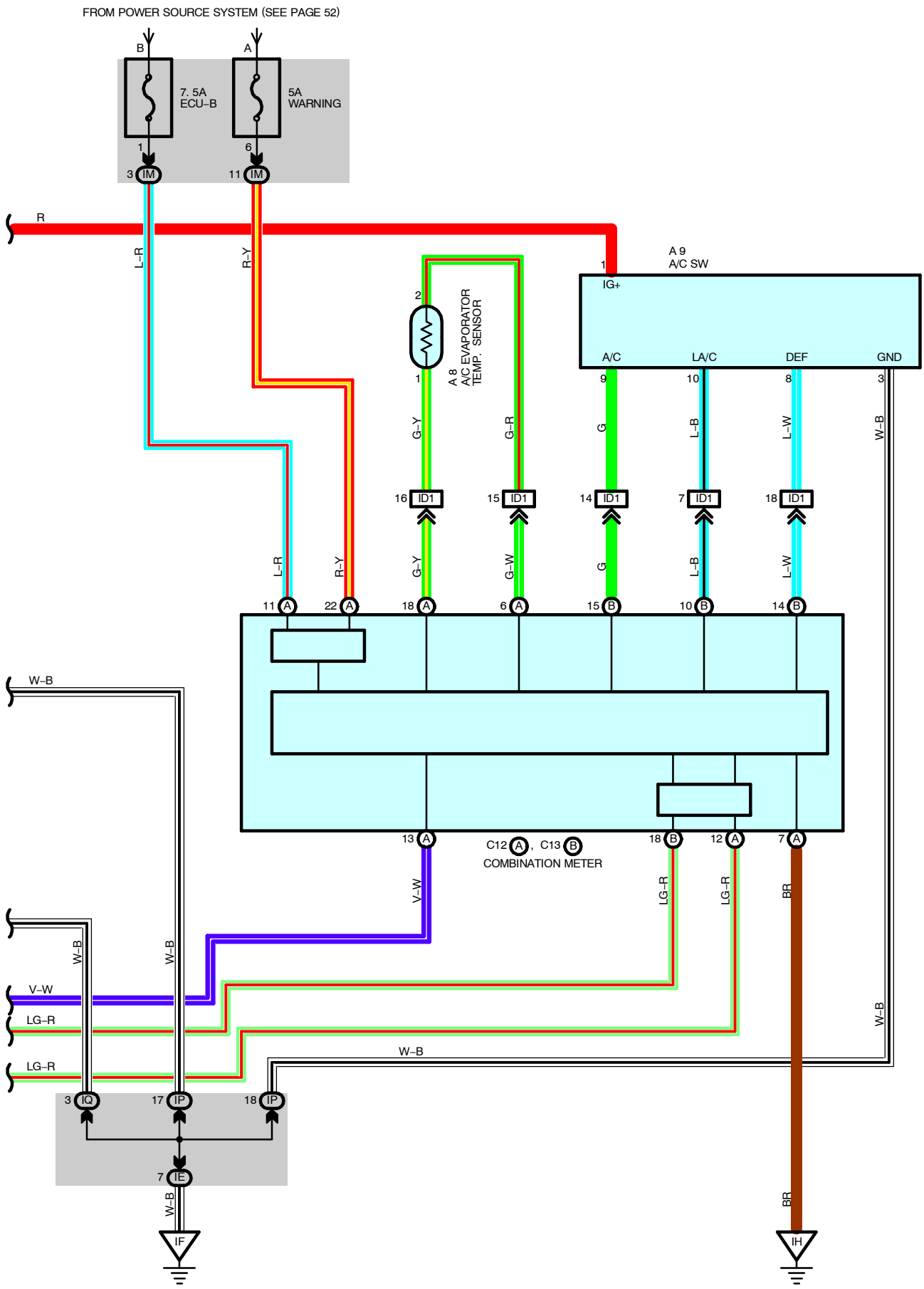
FROM POWER SOURCE SYSTEM (SEE PAGE 52)
B
A
7. 5A
ECU–B
5A
WARNING
1
6
3 IM
11 IM
R
L–R
R–Y
A 9
A/C SW
IG+
2
A 8
A/C EVAPORATOR
TEMP. SENSOR
1
A/C
LA/C
DEF
GND
9
10
8
3
G–Y
G–R
G
L–B
L–W
W–B
16 ID1
15 ID1
14 ID1
7 ID1
18 ID1
L–R
R–Y
G–Y
G–W
G
L–B
L–W
11 A
22 A
18 A
6 A
15 B
10 B
14 B
W–B
13 A
C12 A, C13 B
COMBINATION METER
18 B
12 A
7 A
V–W
LG–R
BR
W–B
W–B
V–W
LG–R
LG–R
W–B
W–B
W–B
3 IQ
17 IP
18 IP
7 IE
W–B
IF
BR
IH

SYSTEM OUTLINE

1. HEATER BLOWER MOTOR OPERATION

Current is applied at all times through the HTR fuse (50A) to TERMINAL 5 of the heater relay.
When the ignition SW is turned on, current flows through the HTR fuse (10A) to TERMINAL 2 of the heater relay to the coil side to TERMINAL 1 to TERMINAL 8 of the blower SW.

∗ Low speed operation
When the blower SW is moved to LO position, current flows to TERMINAL 8 of the blower SW to TERMINAL 1 to GROUND, causing the heater relay to switch on. This causes the current to flow from the HTR fuse (50A) to TERMINAL 5 of the heater relay to TERMINAL 3 to TERMINAL 1 of the blower motor to TERMINAL 2 to TERMINAL 1 of the blower resistor to TERMINAL 4 to GROUND, causing the blower motor to rotate at low speed.

∗ Medium speed operation (Operation at M1, M2)
When the blower SW is moved to M1 position, current flows to TERMINAL 8 of the blower SW to TERMINAL 1 to GROUND, turning the heater relay to switch on. This causes the current to flow from the HTR fuse (50A) to TERMINAL 5 of the heater relay to TERMINAL 3 to TERMINAL 1 of the blower motor to TERMINAL 2 to TERMINAL 1 of the blower resistor to TERMINAL 2 to TERMINAL 6 of the blower SW to TERMINAL 1 to GROUND. At this time, the blower resistance of the blower resistor is less than at low speed, so the blower motor rotates at medium low speed.
When the blower SW is moved to M2 position, current flows through the motor flows from TERMINAL 1 of the blower resistor to TERMINAL 3 to TERMINAL 5 of the blower SW to TERMINAL 1 to GROUND. At this time, resistance of the blower resistor is less than at M1 position, so the blower motor rotates at medium high speed.

∗ High speed operation
When the blower SW is moved to HIGH position, current flows to TERMINAL 8 of the blower SW to TERMINAL 1 to GROUND, turning the heater relay to switch on.
This causes the current to flow from the HTR fuse (50A) to TERMINAL 5 of the heater relay to TERMINAL 3 to TERMINAL 1 of the blower motor to TERMINAL 2 to TERMINAL 4 of the blower SW to TERMINAL 1 to GROUND, causing the blower motor to rotate at high speed.

SERVICE HINTS

B4 BLOWER RESISTOR

1–3 : Approx. **0.47** Ω
1–2 : Approx. **1.42** Ω
1–4 : Approx. **2.28** Ω

B5 BLOWER SW

8–1 : Continuity with the blower SW at **LO**, **M1**, **M2** and **HI** position
6–1 : Continuity with the blower SW at **M1** position
5–1 : Continuity with the blower SW at **M2** position
4–1 : Continuity with the blower SW at **HI** position

○ : PARTS LOCATION

Code	See Page	Code	See Page	Code	See Page
A2	32 (1ZZ–FE)	B3	36	E2 A	34 (2ZZ–GE)
	34 (2ZZ–GE)	B4	36	E3 B	32 (1ZZ–FE)
A3	32 (1ZZ–FE)	B5	36		34 (2ZZ–GE)
	34 (2ZZ–GE)	C12 A	36	J2	33 (1ZZ–FE)
A8	36	C13 B	36		35 (2ZZ–GE)
A9	36	E2 A	32 (1ZZ–FE)		

▭ : RELAY BLOCKS

Code	See Page	Relay Blocks (Relay Block Location)
1	26	Engine Room R/B No.1 (Engine Compartment Left)

: JUNCTION BLOCK AND WIRE HARNESS CONNECTOR

Code	See Page	Junction Block and Wire Harness (Connector Location)
IB	25	Engine Room Main Wire and Instrument Panel J/B (Instrument Panel Brace RH)
IC		
ID		
IE	25	Instrument Panel Wire and Instrument Panel J/B (Instrument Panel Brace RH)
IM		
IP	25	Cowl No.2 Wire and Instrument Panel J/B (Instrument Panel Brace RH)
IQ		
2B	23	Engine Wire and Engine Room J/B (Engine Compartment Left)
2F	23	Engine Room Main Wire and Engine Room J/B (Engine Compartment Left)
2G		

: CONNECTOR JOINING WIRE HARNESS AND WIRE HARNESS

Code	See Page	Joining Wire Harness and Wire Harness (Connector Location)
EA1	40 (1ZZ–FE)	Engine Wire and Engine Room Main Wire (Inside of Engine Room R/B No.1)
	42 (2ZZ–GE)	
ID1	44	Cowl No.2 Wire and Instrument Panel Wire (Instrument Panel Brace LH)
IE4	44	Engine Room Main Wire and Instrument Panel Wire (Instrument Panel Brace LH)
IE5		
IG2	46	Engine Room No.2 Wire and Instrument Panel Wire (Right Kick Panel)

: GROUND POINTS

Code	See Page	Ground Points Location
EB	40 (1ZZ–FE)	Front Left Fender
	42 (2ZZ–GE)	
ED	40 (1ZZ–FE)	Cylinder Head Cover LH
	42 (2ZZ–GE)	
IF	44	Instrument Panel Brace RH
IG	44	Cowl Side Panel RH
IH		

: SPLICE POINTS

Code	See Page	Wire Harness with Splice Points	Code	See Page	Wire Harness with Splice Points
I2	46	Cowl No.2 Wire			

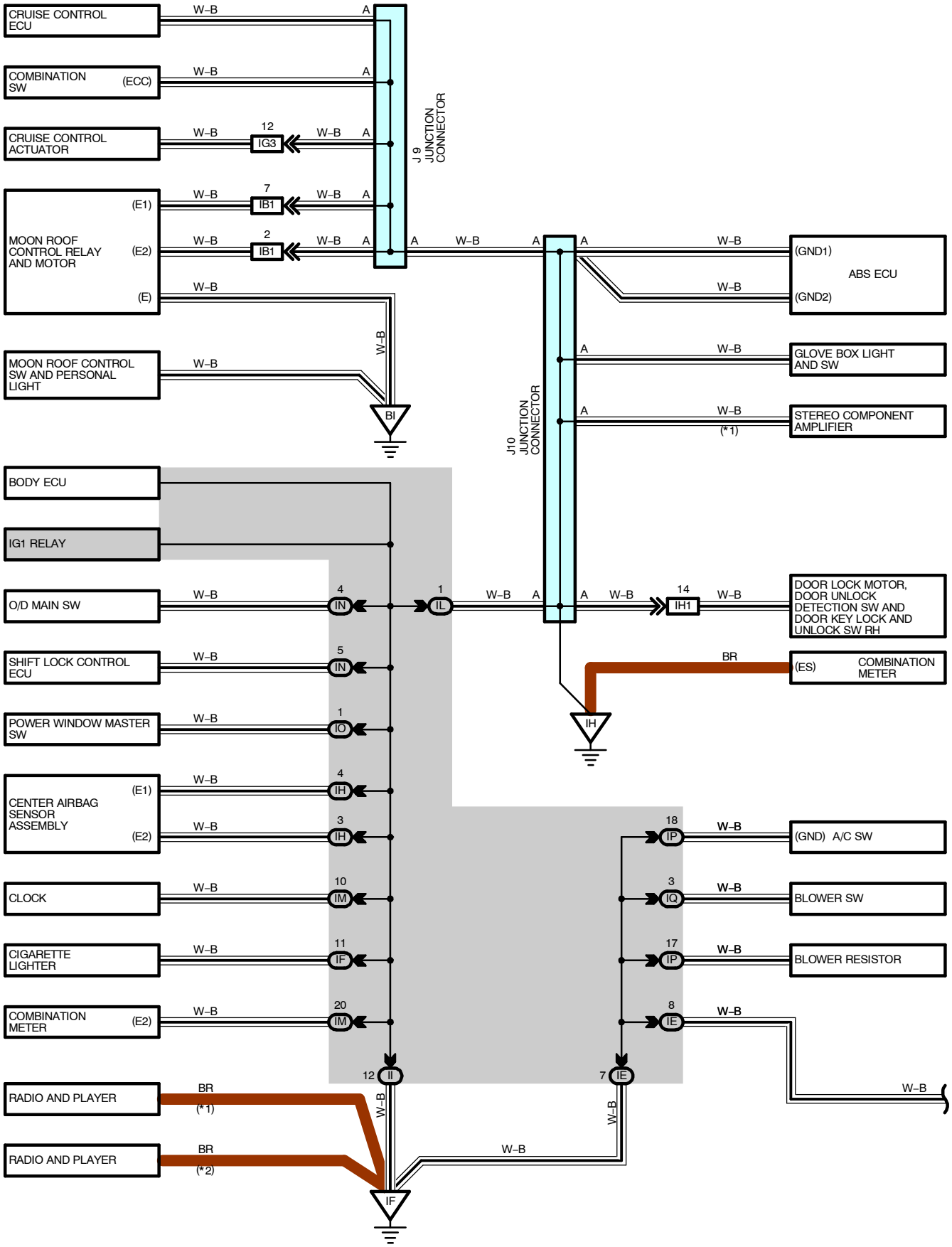
CRUISE CONTROL ECU
COMBINATION SW (ECC)
CRUISE CONTROL ACTUATOR
MOON ROOF CONTROL RELAY AND MOTOR
(E1)
(E2)
(E)
MOON ROOF CONTROL SW AND PERSONAL LIGHT
W–B
A
12
IG3
7
IB1
2
IB1
J 9 JUNCTION CONNECTOR
BI
J10 JUNCTION CONNECTOR
(GND1)
ABS ECU
(GND2)
GLOVE BOX LIGHT AND SW
STEREO COMPONENT AMPLIFIER
(*1)
BODY ECU
IG1 RELAY
O/D MAIN SW
SHIFT LOCK CONTROL ECU
POWER WINDOW MASTER SW
CENTER AIRBAG SENSOR ASSEMBLY
CLOCK
CIGARETTE LIGHTER
COMBINATION METER
4
IN
5
IN
1
IO
4
IH
3
IH
10
IM
11
IF
20
IM
1
IL
14
IH1
DOOR LOCK MOTOR, DOOR UNLOCK DETECTION SW AND DOOR KEY LOCK AND UNLOCK SW RH
BR
(ES)
COMBINATION METER
IH
18
IP
(GND) A/C SW
3
IQ
BLOWER SW
17
IP
BLOWER RESISTOR
8
IE
12
II
7
IE
RADIO AND PLAYER
(*1)
(*2)
IF

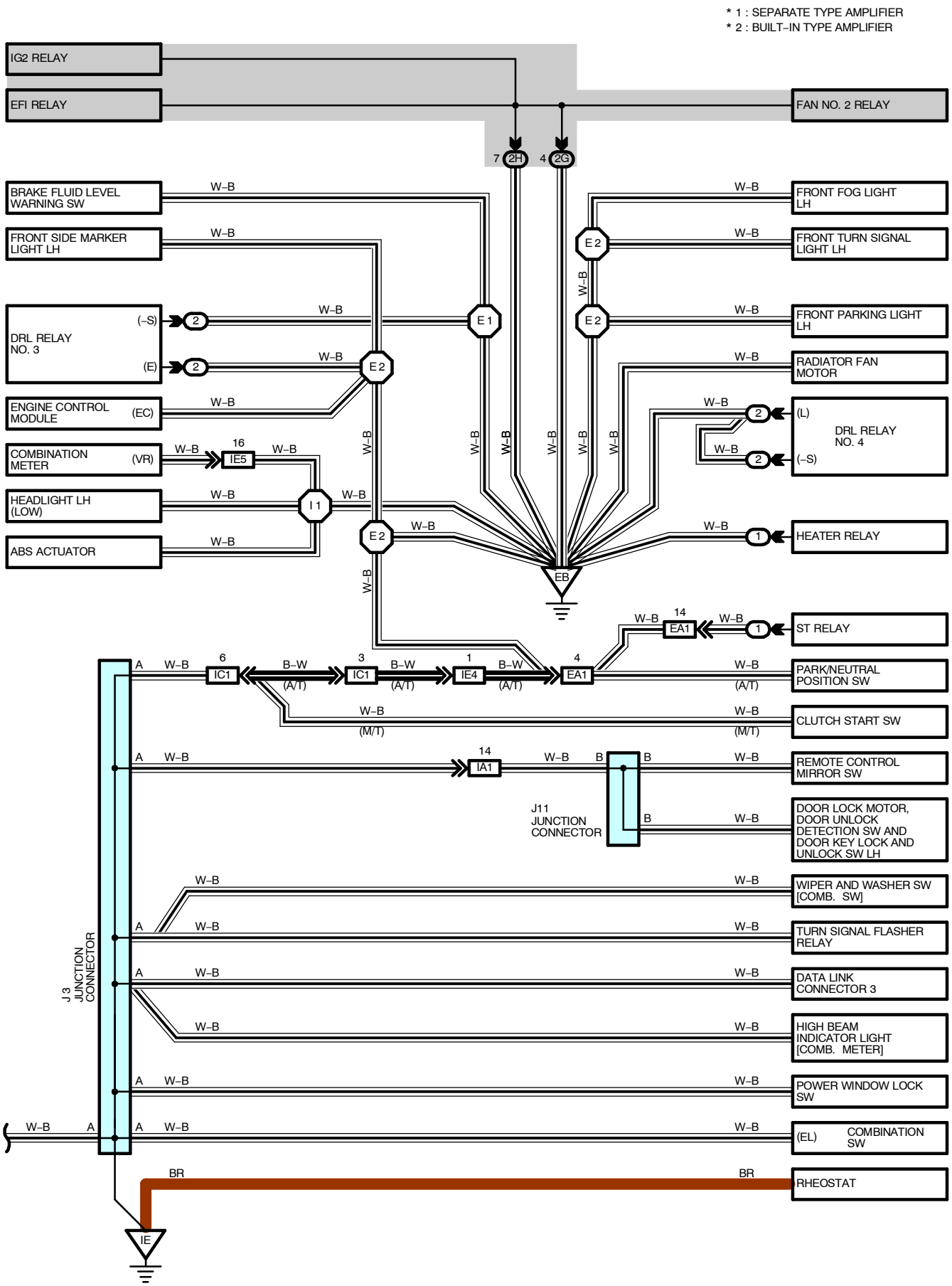
* 1 : SEPARATE TYPE AMPLIFIER
* 2 : BUILT–IN TYPE AMPLIFIER
IG2 RELAY
EFI RELAY
FAN NO. 2 RELAY
BRAKE FLUID LEVEL WARNING SW
FRONT SIDE MARKER LIGHT LH
DRL RELAY NO. 3
(–S)
(E)
ENGINE CONTROL MODULE
(EC)
COMBINATION METER
(VR)
HEADLIGHT LH (LOW)
ABS ACTUATOR
FRONT FOG LIGHT LH
FRONT TURN SIGNAL LIGHT LH
FRONT PARKING LIGHT LH
RADIATOR FAN MOTOR
DRL RELAY NO. 4
(L)
(–S)
HEATER RELAY
ST RELAY
PARK/NEUTRAL POSITION SW
CLUTCH START SW
REMOTE CONTROL MIRROR SW
J11 JUNCTION CONNECTOR
DOOR LOCK MOTOR, DOOR UNLOCK DETECTION SW AND DOOR KEY LOCK AND UNLOCK SW LH
WIPER AND WASHER SW [COMB. SW]
TURN SIGNAL FLASHER RELAY
DATA LINK CONNECTOR 3
HIGH BEAM INDICATOR LIGHT [COMB. METER]
POWER WINDOW LOCK SW
(EL)
COMBINATION SW
RHEOSTAT
J 3 JUNCTION CONNECTOR
W–B
B–W
(A/T)
(M/T)
BR
7 2H
4 2G
E 1
E 2
I 1
IE5
IC1
IE4
EA1
IA1
EB
IE

I GROUND POINT

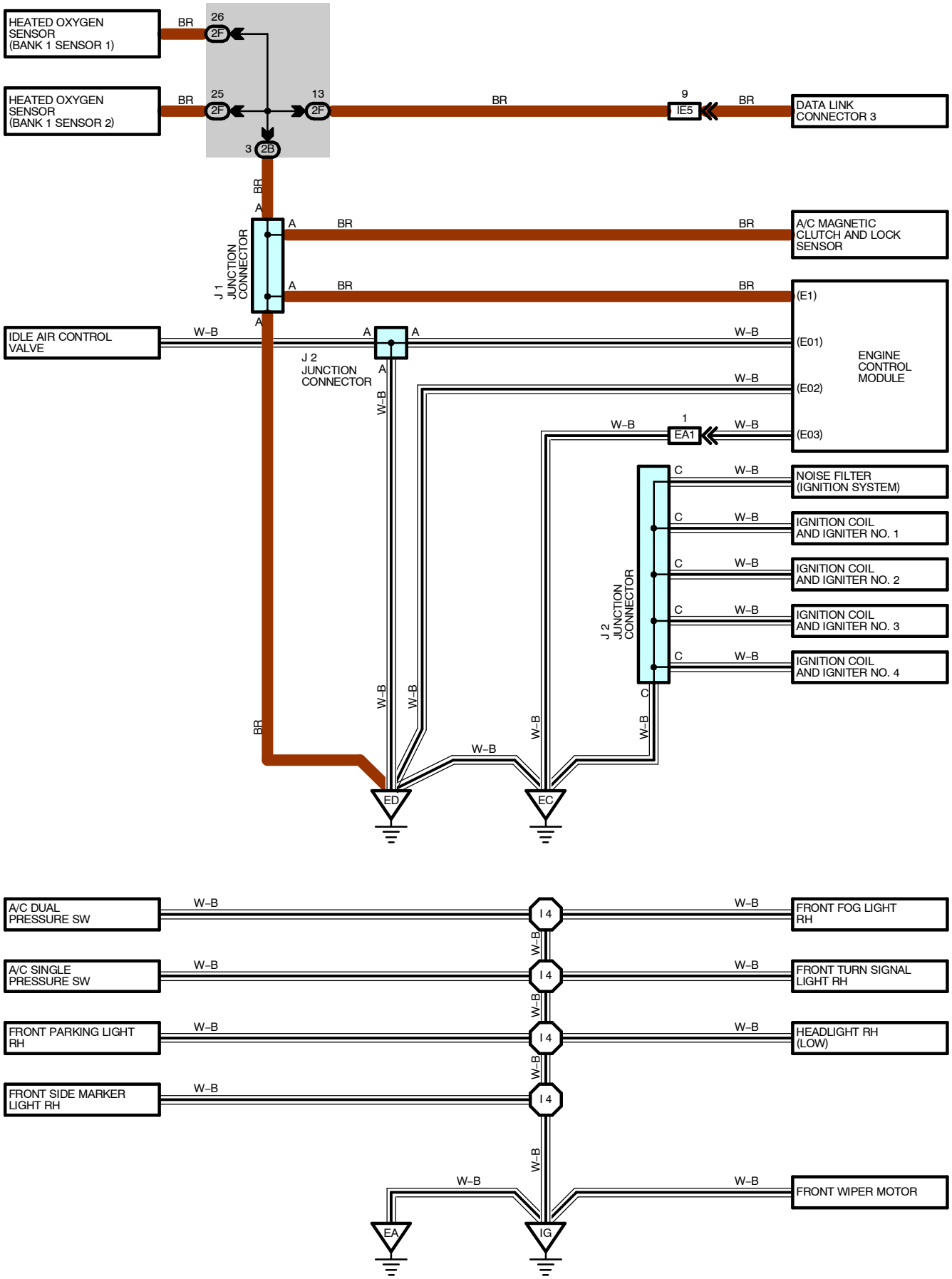

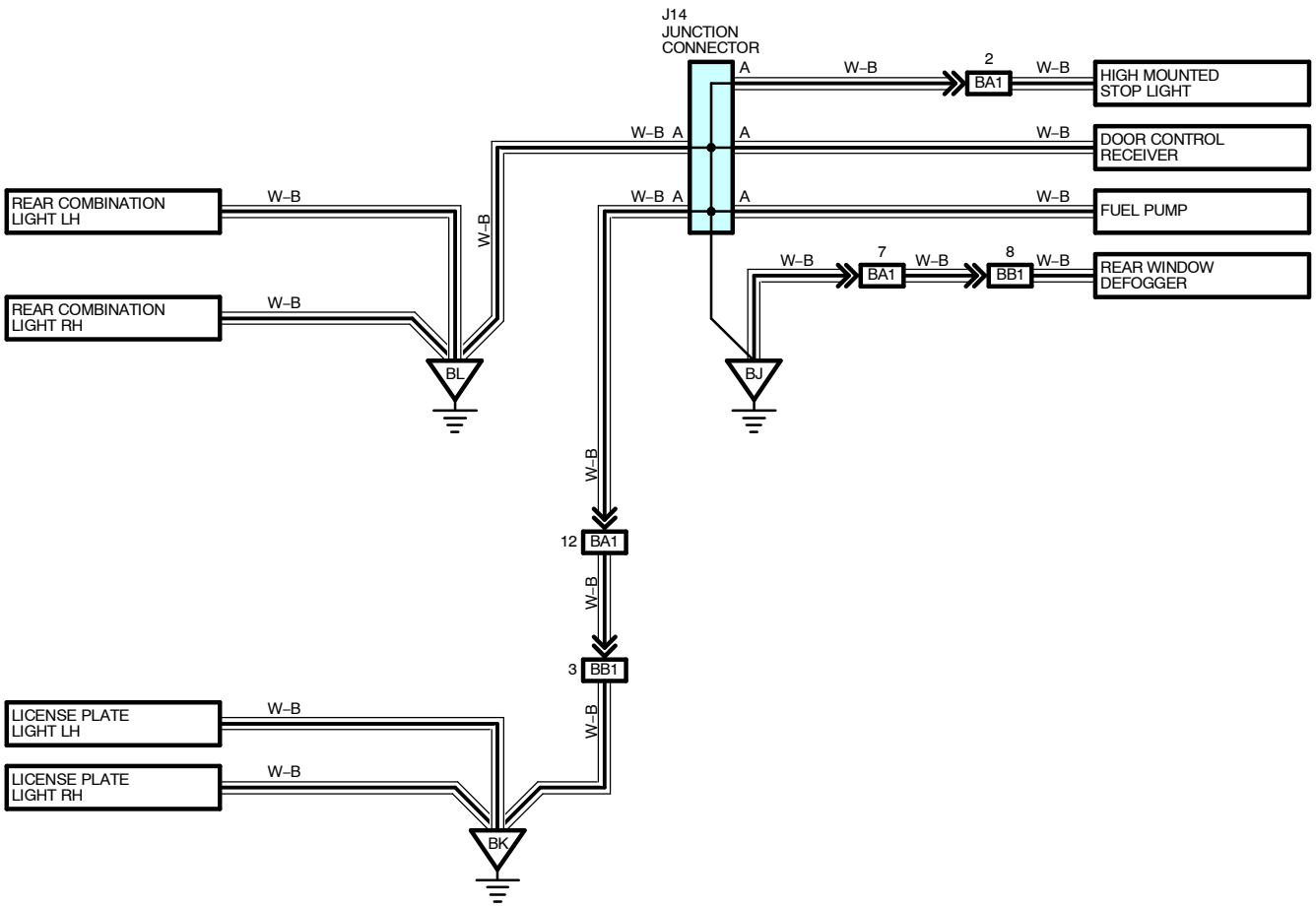
J14
JUNCTION
CONNECTOR
A
W–B
2
BA1
W–B
HIGH MOUNTED
STOP LIGHT
W–B A
A
W–B
DOOR CONTROL
RECEIVER
REAR COMBINATION
LIGHT LH
W–B
W–B
W–B A
A
W–B
FUEL PUMP
W–B
7
BA1
W–B
8
BB1
W–B
REAR WINDOW
DEFOGGER
REAR COMBINATION
LIGHT RH
W–B
BL
BJ
W–B
12
BA1
W–B
3
BB1
W–B
LICENSE PLATE
LIGHT LH
W–B
LICENSE PLATE
LIGHT RH
W–B
BK

I GROUND POINT

: PARTS LOCATION

Code	See Page	Code	See Page	Code	See Page
J1	33 (1ZZ–FE)	J2	35 (2ZZ–GE)	J10	37
	35 (2ZZ–GE)	J3	37	J11	38
J2	33 (1ZZ–FE)	J9	37	J14	38

: RELAY BLOCKS

Code	See Page	Relay Blocks (Relay Block Location)
1	26	Engine Room R/B No.1 (Engine Compartment Left)
2	27	Engine Room R/B No.2 (Engine Compartment Left)

: JUNCTION BLOCK AND WIRE HARNESS CONNECTOR

Code	See Page	Junction Block and Wire Harness (Connector Location)
IE	25	Instrument Panel Wire and Instrument Panel J/B (Instrument Panel Brace RH)
IF		
IH		
II		
IL		
IM		
IN	25	Floor Wire and Instrument Panel J/B (Instrument Panel Brace RH)
IO		
IP	25	Cowl No.2 Wire and Instrument Panel J/B (Instrument Panel Brace RH)
IQ		
2B	23	Engine Wire and Engine Room J/B (Engine Compartment Left)
2F	23	Engine Room Main Wire and Engine Room J/B (Engine Compartment Left)
2G		
2H		

: CONNECTOR JOINING WIRE HARNESS AND WIRE HARNESS

Code	See Page	Joining Wire Harness and Wire Harness (Connector Location)
EA1	40 (1ZZ–FE)	Engine Wire and Engine Room Main Wire (Inside of Engine Room R/B No.1)
	42 (2ZZ–GE)	
IA1	44	Front Door LH Wire and Instrument Panel Wire (Left Kick Panel)
IB1	44	Roof Wire and Instrument Panel Wire (left Kick Panel)
IC1	44	Instrument Panel Wire and Instrument Panel No.2 Wire (Instrument Panel Reinforcement LH)
IE4	44	Engine Room Main Wire and Instrument Panel Wire (Instrument Panel Brace LH)
IE5		
IG3	46	Engine Room No.2 Wire and Instrument Panel Wire (Right Kick Panel)
IH1	46	Front Door RH Wire and Instrument Panel Wire (Right Kick Panel)
BA1	48	Back Door No.1 Wire and Floor Wire (Quarter Panel LH)
BB1	48	Back Door No.2 Wire and Back Door No.1 Wire (Back Door Upper Left)

: GROUND POINTS

Code	See Page	Ground Points Location
EA	40 (1ZZ–FE)	Front Right Fender
	42 (2ZZ–GE)	
EB	40 (1ZZ–FE)	Front Left Fender
	42 (2ZZ–GE)	
EC	40 (1ZZ–FE)	Cylinder Head Cover LH
	42 (2ZZ–GE)	
ED	40 (1ZZ–FE)	
	42 (2ZZ–GE)	
IE	44	Cowl Side Panel LH
IF	44	Instrument Panel Brace RH
IG	44	Cowl Side Panel RH
IH		
BI	48	Roof Left
BJ	48	Luggage Room Left
BK	48	Back Dooe Left
BL	48	Back Panel Center

: SPLICE POINTS

Code	See Page	Wire Harness with Splice Points	Code	See Page	Wire Harness with Splice Points
E1	40 (1ZZ–FE)	Engine Room Main Wire	E2	42 (2ZZ–GE)	Engine Wire
	42 (2ZZ–GE)		I1	46	Engine Room Main Wire
E2	40 (1ZZ–FE)	Engine Wire	I4	46	Engine Room No.2 Wire

J POWER SOURCE (Current Flow Chart)

The chart below shows the route by which current flows from the battery to each electrical source (Fusible Link, Circuit Breaker, Fuse, etc.) and other parts.

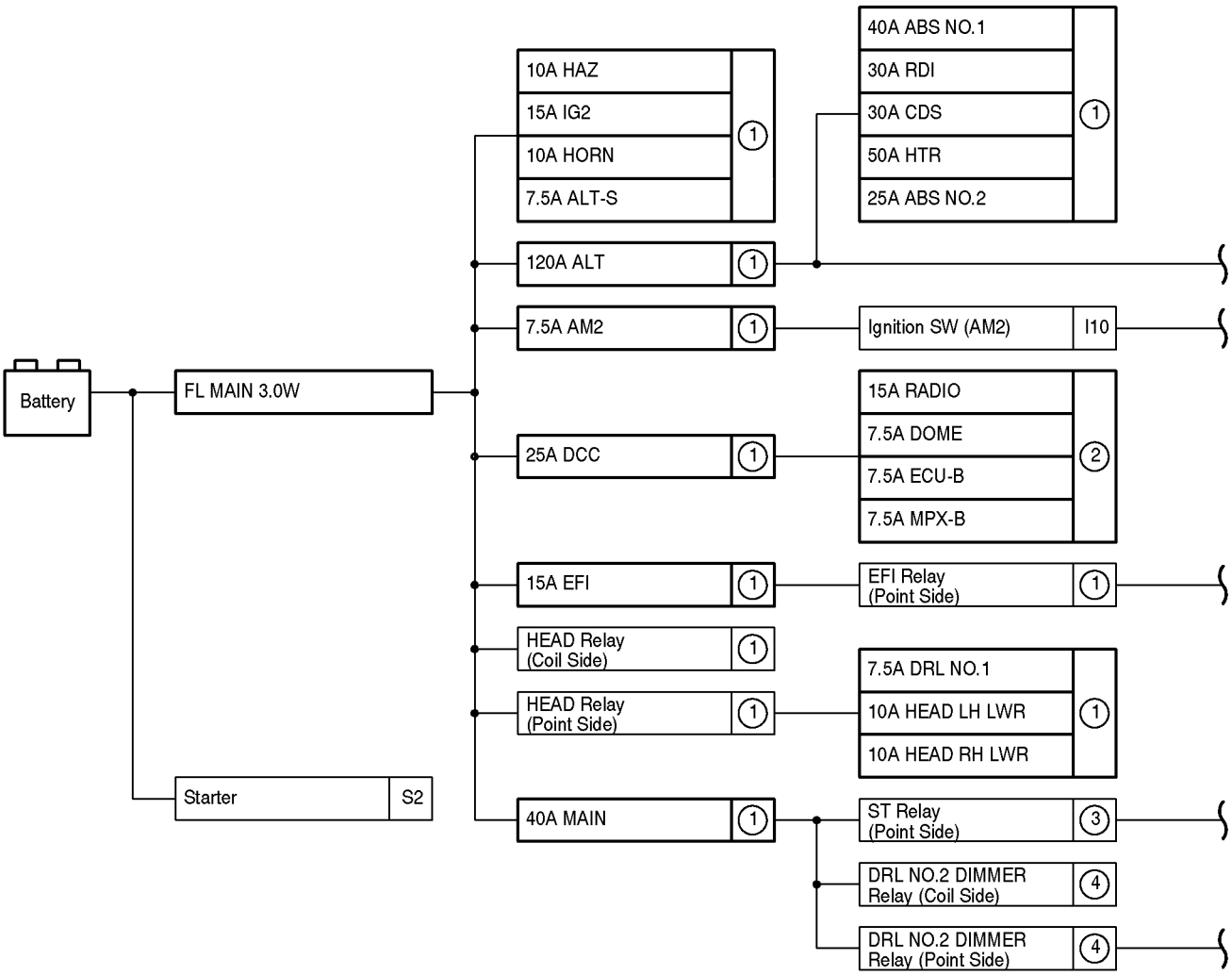

[LOCATION] ① : Engine Room J/B (See page 22) ② : Instrument Panel J/B (See page 24)

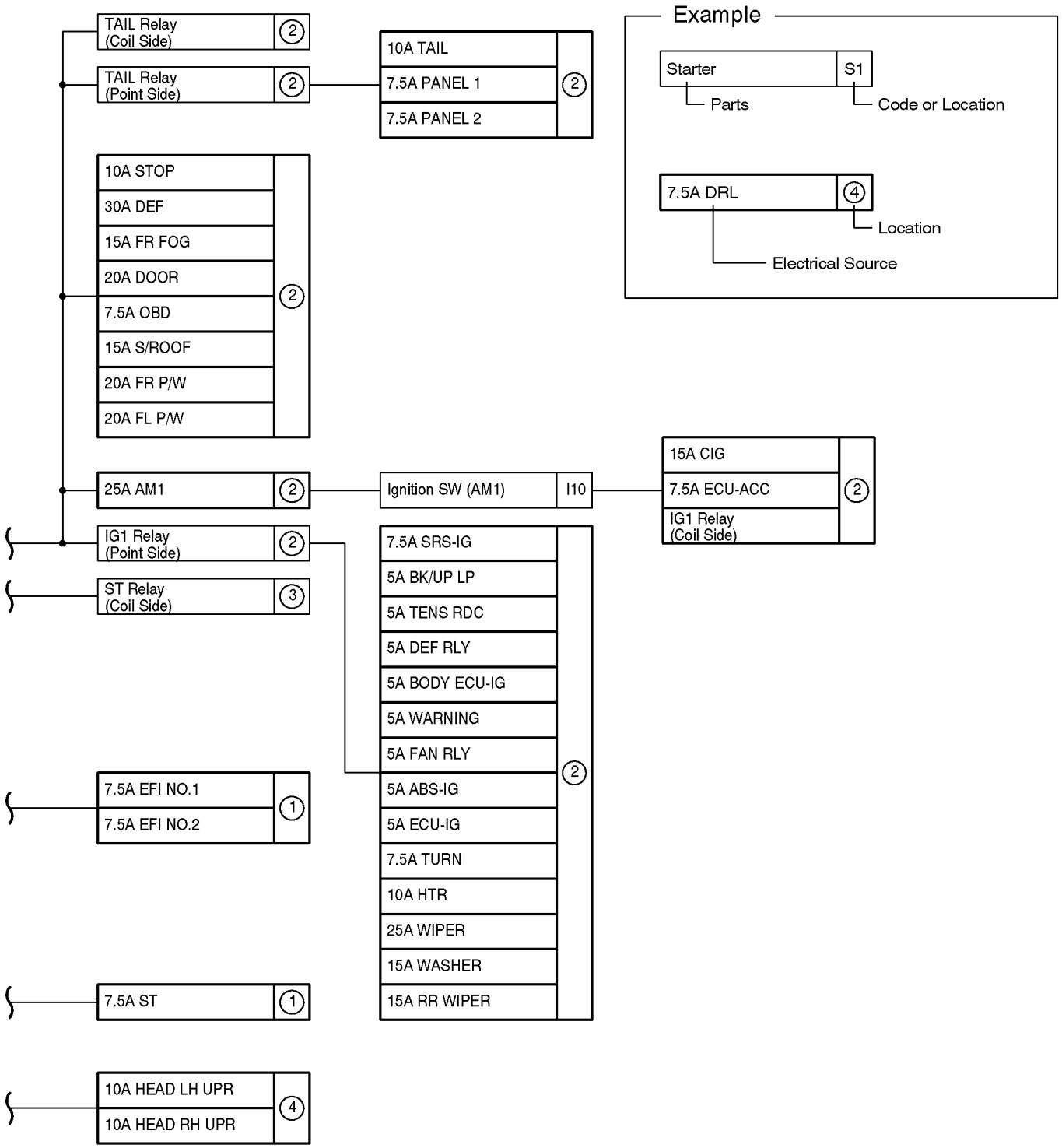

③ : Engine Room R/B No.1 (See page 26)

④ : Engine Room R/B No.2 (See page 27)

Engine Room J/B (See Page 22)

Fuse		System	Page
7.5A	ALT−S	Charging	60
7.5A	AM2	Engine Control SRS Starting and Ignition	62 129 56
7.5A	DRL NO.1	Headlight	74
7.5A	EFI NO.1	Electronically Controlled Transmission and A/T Indicator Engine Control	142 62
7.5A	EFI NO.2	Engine Control	62
7.5A	ST	Engine Control Starting and Ignition	62 56
10A	HAZ	Turn Signal and Hazard Warning Light	94
10A	HEAD LH LWR	Headlight	74
10A	HEAD RH LWR	Combination Meter Fog Light Headlight	170 78 74
10A	HORN	Horn Multiplex Communication System Wireless Door Lock Control	150 100 110
15A	EFI	Electronically Controlled Transmission and A/T Indicator Engine Control	142 62
15A	IG2	Engine Control Starting and Ignition	62 56
25A	ABS NO.2	ABS	134
30A	CDS	Radiator Fan and Condenser Fan	176
30A	RDI	Radiator Fan and Condenser Fan	176
40A	ABS NO.1	ABS	134
40A	MAIN	Engine Control Headlight Multiplex Communication System Starting and Ignition	62 74 100 56
50A	HTR	Air Conditioning	178
120A	ALT	Charging Illumination Light Reminder Buzzer Multiplex Communication System Taillight	60 84 96 100 80

∗ These are the page numbers of the first page on which the related system is shown.

Instrument Panel J/B (See Page 24)

Fuse		System	Page
5A	ABS–IG	ABS	134
5A	BK/UP LP	Back–Up Light	90
		Combination Meter	170
		Cruise Control	138
		Electronically Controlled Transmission and A/T Indicator	142
		Engine Control	62
5A	BODY ECU–IG	Door Lock Control	114
		Electric Tension Reducer	124
		Headlight	74
		Interior Light	88
		Key Reminder and Seat Belt Warning	126
		Light Reminder Buzzer	96
		Moon Roof	122
		Multiplex Communication System	100
		Power Window	118
		Wireless Door Lock Control	110
5A	DEF RLY	Multiplex Communication System	100
		Power Window	118
		Rear Window Defogger	162
5A	ECU–IG	Cruise Control	138
5A	FAN RLY	Radiator Fan and Condenser Fan	176
5A	TENS RDC	Electric Tension Reducer	124
		Moon Roof	122
		Multiplex Communication System	100
		Shift Lock	148
5A	WARNING	ABS	134
		Air Conditioning	178
		Charging	60
		Combination Meter	170
		Cruise Control	138
		Electronically Controlled Transmission and A/T Indicator	142
		Engine Control	62
		Key Reminder and Seat Belt Warning	126
		Multiplex Communication System	100
7.5A	DOME	Cigarette Lighter and Clock	152
		Interior Light	88
		Key Reminder and Seat Belt Warning	126
		Multiplex Communication System	100
7.5A	ECU–ACC	Cigarette Lighter and Clock	152
		Door Lock Control	114
		Electric Tension Reducer	124
		Interior Light	88

∗ These are the page numbers of the first page on which the related system is shown.

Fuse		System	Page
7.5A	ECU−ACC	Key Reminder and Seat Belt Warning	126
		Light Reminder Buzzer	96
		Moon Roof	122
		Multiplex Communication System	100
		Power Window	118
		Radio and Player (Built−In Type Amplifier)	168
		Radio and Player (Separate Type Amplifier)	164
		Remote Control Mirror	154
		Wireless Door Lock Control	110
7.5A	ECU−B	Air Conditioning	178
		Combination Meter	170
		Interior Light	88
		Multiplex Communication System	100
7.5A	MPX−B	Door Lock Control	114
		Electric Tension Reducer	124
		Headlight	74
		Interior Light	88
		Key Reminder and Seat Belt Warning	126
		Light Reminder Buzzer	96
		Moon Roof	122
		Multiplex Communication System	100
		Power Window	118
		Wireless Door Lock Control	110
7.5A	OBD	Engine Control	62
7.5A	PANEL 1	Illumination	84
7.5A	PANEL 2	Combination Meter	170
		Illumination	84
7.5A	SRS−IG	SRS	129
7.5A	TURN	Turn Signal and Hazard Warning Light	94
10A	HTR	Air Conditioning	178
		Rear Window Defogger	162
10A	STOP	ABS	134
		Cruise Control	138
		Electronically Controlled Transmission and A/T Indicator	142
		Engine Control	62
		Shift Lock	148
		Stop Light	92
10A	TAIL	Taillight	80
15A	CIG	Cigarette Lighter and Clock	152
15A	FR FOG	Fog Light	78
15A	RADIO	Radio and Player (Built−In Type Amplifier)	168
		Radio and Player (Separate Type Amplifier)	164
15A	RR WIPER	Rear Wiper and Washer	160

∗ These are the page numbers of the first page on which the related system is shown.

Fuse		System	Page
15A	S/ROOF	Moon Roof	122
15A	WASHER	Front Wiper and Washer Rear Wiper and Washer	156 160
20A	DOOR	Door Lock Control Electric Tension Reducer Interior Light Key Reminder and Seat Belt Warning Light Reminder Buzzer Moon Roof Multiplex Communication System Power Window Wireless Door Lock Control	114 124 88 126 96 122 100 118 110
20A	FL P/W	Multiplex Communication System Power Window	100 118
20A	FR P/W	Multiplex Communication System Power Window	100 118
25A	WIPER	Front Wiper and Washer	156
30A	DEF	Multiplex Communication System Rear Window Defogger	100 162

Engine Room R/B No.2 (See Page 27)

Fuse		System	Page
10A	HEAD LH UPR	Headlight	74
10A	HEAD RH UPR	Headlight	74

∗ These are the page numbers of the first page on which the related system is shown.

K CONNECTOR LIST

A1
BLACK

A2
GRAY

A3
GRAY

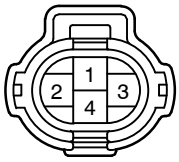

A4
GRAY

A5
BLACK

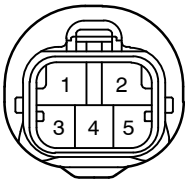

A6
GRAY

A7
GRAY

A8

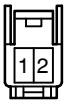

A9

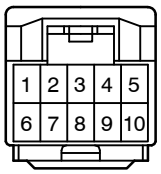

A10

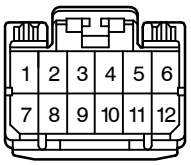

A11

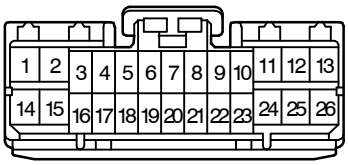

A12
YELLOW

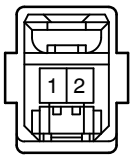

A13
YELLOW

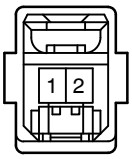

A14
BLACK

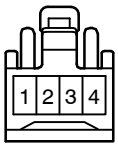

A15

A16

B1
GRAY

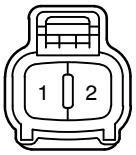

B2
GRAY

B3
BLACK

B4
BLACK

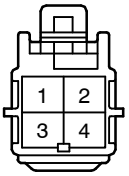

B5

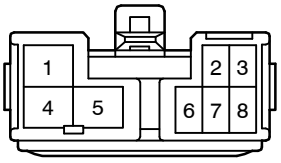

B6

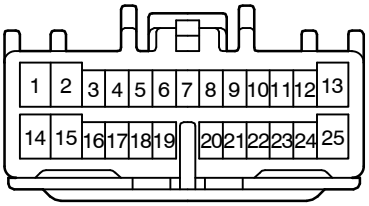

B7

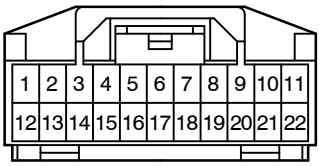

B8

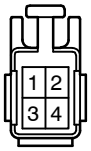

B9

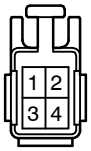

B10
BLACK

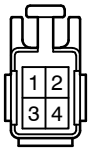

C1
BLACK

C2
BLACK

C3
BLACK

C4
BLACK

C5
BLACK

C6
YELLOW

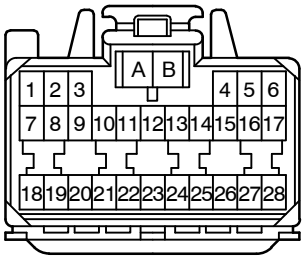

C7
YELLOW

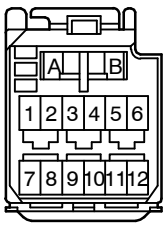

C8
YELLOW

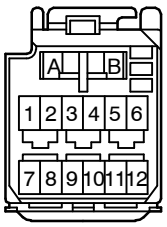

C9

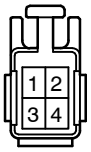

C10

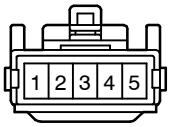

C11

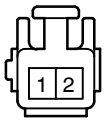

C12

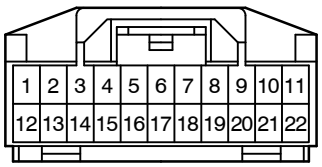

C13
BLUE

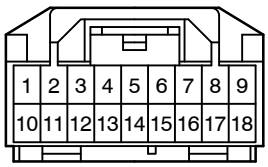

C14
BLACK

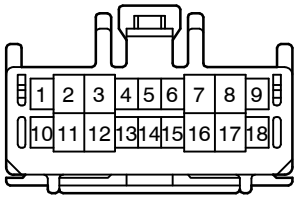

C15

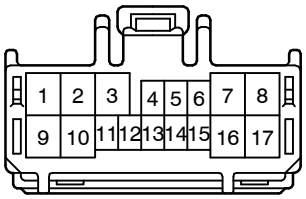

C16
BLACK

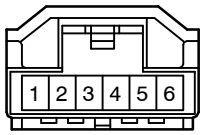

C17

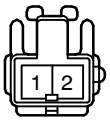

C18

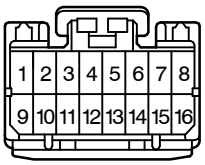

D1

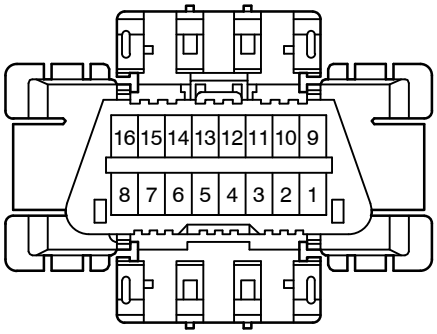

D2

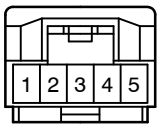

D3

D4

D5
BLACK

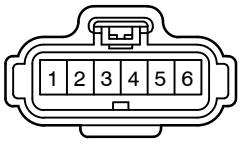

D6
BLACK

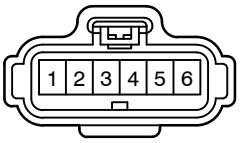

D7
YELLOW

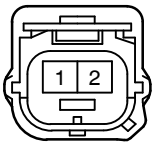

D8
YELLOW

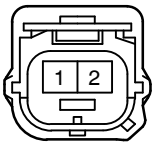

K CONNECTOR LIST

E1
GRAY

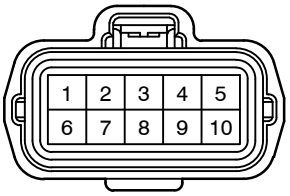

E2

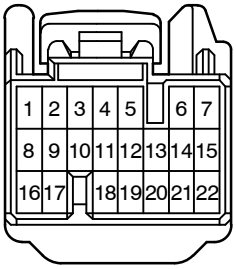

E3
BLACK

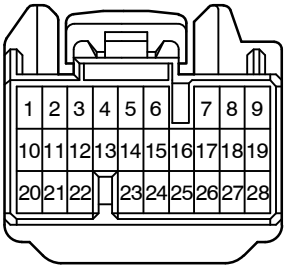

E4

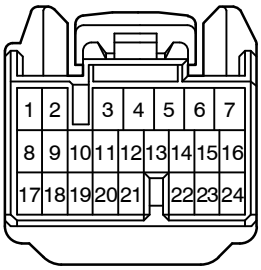

E5

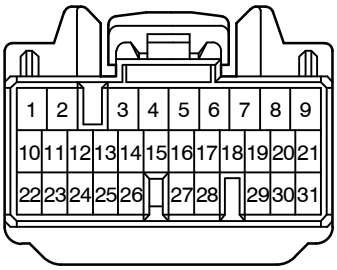

E6
GRAY

E7
GRAY

F1
YELLOW

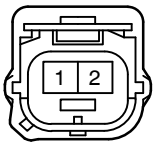

F2
YELLOW

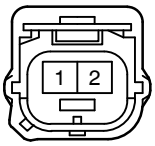

F3

F4

F5
BLACK

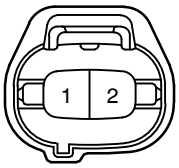

F6
BLACK

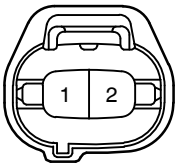

F7

F8

F9
GRAY

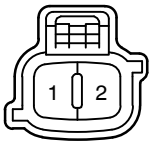

F10
GRAY

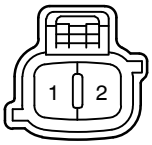

F11
BLACK

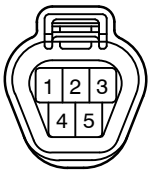

F12

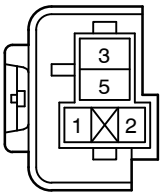

F13

F14

F15

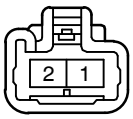

F16

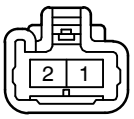

F17

G1

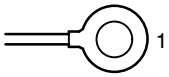

G2
BLACK

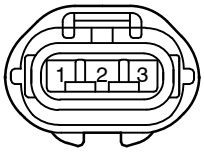

G3
BLACK

H1
BLACK

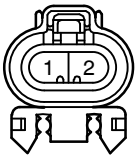

H2

H3
BLACK

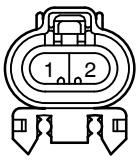

H4

H5
BLACK

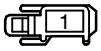

H6
BLACK

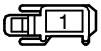

H7
BLACK

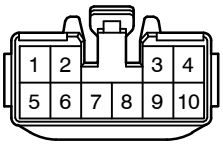

H8

H9
GRAY

H10

I1
GRAY

I2
BLACK

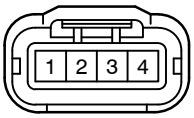

I3
BLACK

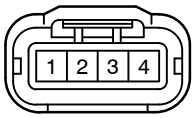

I4
BLACK

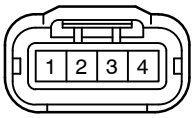

I5
BLACK

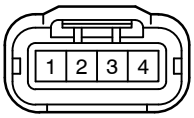

I6
BLACK

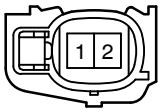

I7
GRAY

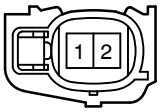

I8
BLACK

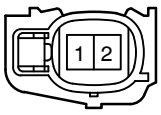

I9
GRAY

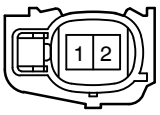

I10

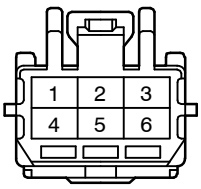

J1
BLUE

J2

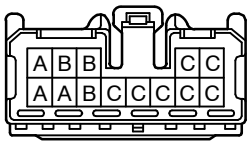

J3

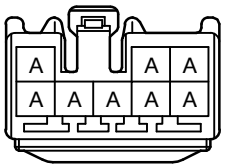

J4
BLACK

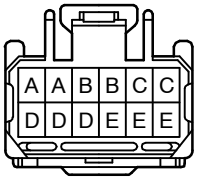

J5
BLACK

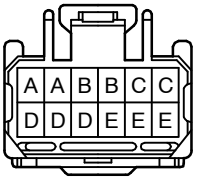

K CONNECTOR LIST

J6

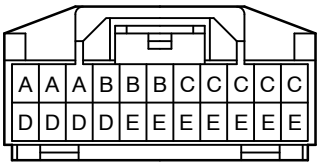

J7
BLUE

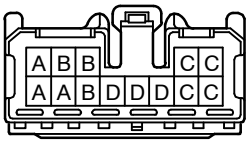

J8

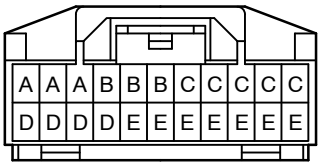

J9
BLACK

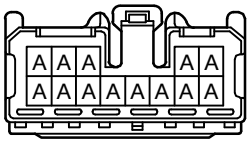

J10

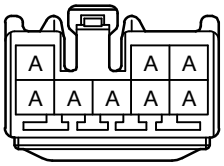

J11

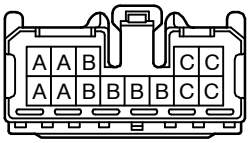

J12

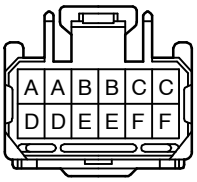

J13

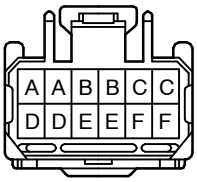

J14

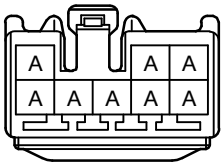

K1
GRAY

L1

L2

L3

L4

M1
BLACK

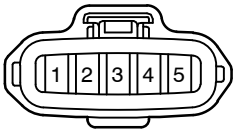

M2
BLACK

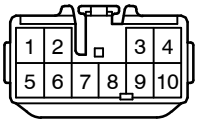

M3

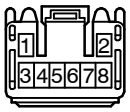

N1
BLACK

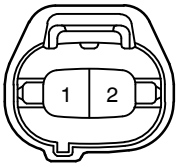

N2

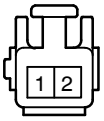

O1
BLACK

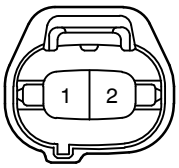

O2
GRAY

O3

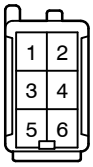

P1
GRAY

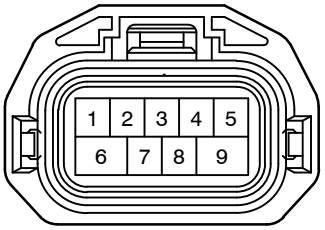

P2
BLACK

P3
BLACK

P4
BLUE

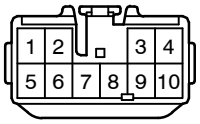

P5

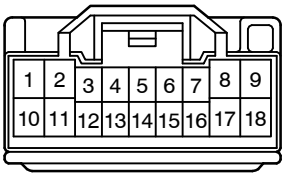

P6

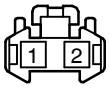

P7

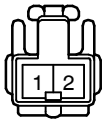

P8

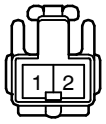

P9
YELLOW

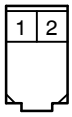

P10
YELLOW

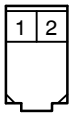

R1
GRAY

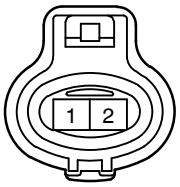

R2
BLUE

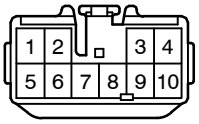

R3
BLUE

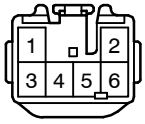

R4

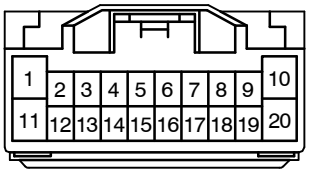

R5

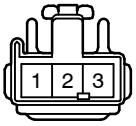

R6

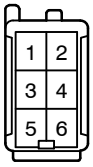

R7

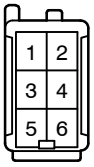

R8

R9

R10
BLACK

R11
BLACK

R12
BLACK

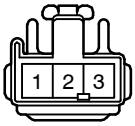

R13

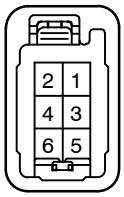

R14

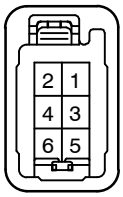

R15

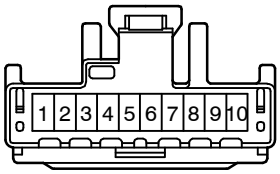

S1
BLACK

S2

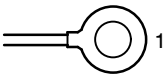

S3

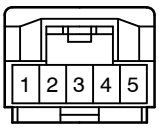

S4
YELLOW

S5
YELLOW

S6

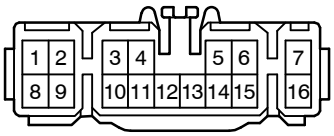

S7

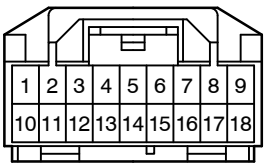

S8

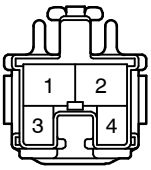

S9
YELLOW

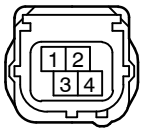

S10
YELLOW

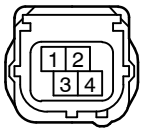

T1
BLACK

T2

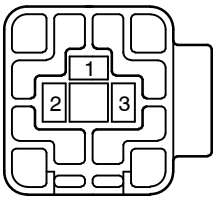

T3

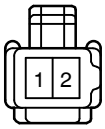

T4

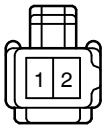

K CONNECTOR LIST

U1

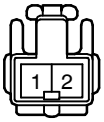

V1
BLACK

V2
BLACK

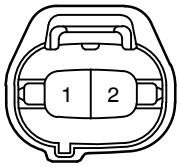

V3
BLUE

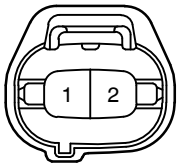

V4
BLACK

V5
BLACK

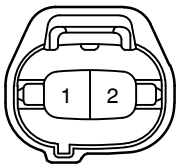

V6
BLACK

V7
BLUE

W1
BLACK

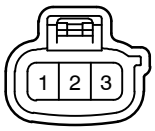

W2

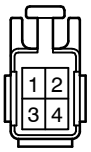

W3

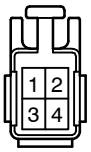

L PART NUMBER OF CONNECTORS

Code	Part Name	Part Number
A 1	A/C Condenser Fan Motor	90980–11410
A 2	A/C Magnetic Clutch and Lock Sensor	90980–11016
A 3	A/C Triple Pressure SW (A/C Dual and Single Pressure SW)	90980–10943
A 4	ABS Actuator	90980–10891
A 5	ABS Actuator	90980–11413
A 6	ABS Speed Sensor Front LH	90980–11003
A 7	ABS Speed Sensor Front RH	
A 8	A/C Evaporator Temp. Sensor	90980–11918
A 9	A/C SW	90980–11923
A10	ABS ECU	90980–11424
A11	ABS ECU	90980–11390
A12	Airbag Squib (Front Passenger Airbag Assembly)	90980–11884
A13	Airbag Squib (Steering Wheel Pad)	
A14	Automatic Light Control Sensor	90980–11107
A15	ABS Speed Sensor Rear LH	90980–11060
A16	ABS Speed Sensor Rear RH	
B 1	Back–Up Light SW	90980–11051
B 2	Brake Fluid Level Warning SW	90980–11207
B 3	Blower Motor	90980–10214
B 4	Blower Resistor	90980–11136
B 5	Blower SW	90980–10877
B 6	Body ECU	90980–11877
B 7	Body ECU	90980–11915
B 8	Buckle SW LH	90980–10795
B 9	Buckle SW RH	
B10	Back Door Lock Motor	
C 1	Camshaft Position Sensor	90980–10947
C 2	Camshaft Timing Oil Control Valve (VVL)	90980–11162
C 3	Camshaft Timing Oil Control Valve (VVT)	
C 4	Crankshaft Position Sensor	90980–10947
C 5	Cruise Control Actuator	90980–11150
C 6	Center Airbag Sensor Assembly	90980–11872
C 7	Center Airbag Sensor Assembly	90980–11869
C 8	Center Airbag Sensor Assembly	90980–11867
C 9	Cigarette Lighter	90980–10795
C10	Clock	90980–10789
C11	Clutch Start SW	90980–10825
C12	Combination Meter	90980–11915
C13	Combination Meter	90980–11913
C14	Combination SW	90980–11594
C15	Combination SW	90980–11672
C16	Combination SW	90980–11986
C17	Cruise Control Clutch SW	90980–10906
C18	Cruise Control ECU	90980–11391
D 1	Data Link Connector 3	90980–11665

Code	Part Name	Part Number
D 2	Door Control Receiver	90980–11909
D 3	Door Courtesy SW LH	90980–10871
D 4	Door Courtesy SW RH	
D 5	Door Lock Motor , Door Lock Detection SW and Door Key Lock and Unlock SW LH	90980–11858
D 6	Door Lock Motor , Door Lock Detection SW and Door Key Lock and Unlock SW RH	
D 7	Door Side Airbag Sensor LH	90980–11856
D 8	Door Side Airbag Sensor RH	
E 1	Electronically Controlled Transmission Solenoid	90980–11658
E 2	Engine Control Module	90980–11638
E 3	Engine Control Module	90980–11637
E 4	Engine Control Module	90980–11476
E 5	Engine Control Module	90980–11421
E 6	Engine Coolant Temp. Sensor	90980–11062
E 7	Engine Oil Level Warning SW	90980–11363
F 1	Front Airbag Sensor LH	90980–11898
F 2	Front Airbag Sensor RH	
F 3	Front Fog Light LH	90980–11003
F 4	Front Fog Light RH	
F 5	Front Parking Light LH	90980–11156
F 6	Front Parking Light RH	
F 7	Front Side Marker Light LH	90980–11162
F 8	Front Side Marker Light RH	
F 9	Front Turn Signal Light LH	90980–11019
F10	Front Turn Signal Light RH	
F11	Front Wiper Motor	90980–11599
F12	Front Fog Light Relay	82660–20340
F13	Front Door Speaker LH	90980–10935
F14	Front Door Speaker RH	
F15	Front Door Tweeter Speaker LH	90980–10915
F16	Front Door Tweeter Speaker RH	
F17	Fuel Sender and Pump	90980–11077
G 1	Generator (2ZZ–GE)	90980–09212
	Generator (1ZZ–FE)	90980–09213
G 2	Generator	90980–11349
G 3	Glove Box Light and SW	90980–11098
H 1	Headlight LH (High)	90980–11659
H 2	Headlight LH (Low)	90980–10481
H 3	Headlight RH (High)	90980–11659
H 4	Headlight RH (Low)	90980–10481
H 5	Horn (High)	90980–10619
H 6	Horn (Low)	
H 7	Hazard SW	90980–10801
H 8	Heated Oxygen Sensor (Bank 1 Sensor 1)	90980–10869
H 9	Heated Oxygen Sensor (Bank 1 Sensor 2)	90980–11028

Note: Not all of the above part numbers of the connector are established for the supply. In case of ordering a connector or terminal with wire, please confirm in advance if there is supply for it using “Parts Catalog News” (published by Parts Engineering Administration Dept.).

Code	Part Name	Part Number
H10	High Mounted Stop Light	90980–10859
I 1	Idle Air Control Valve	90980–11145
I 2	Ignition Coil and Igniter No.1	90980–11885
I 3	Ignition Coil and Igniter No.2	
I 4	Ignition Coil and Igniter No.3	
I 5	Ignition Coil and Igniter No.4	
I 6	Injector No.1	90980–11875
I 7	Injector No.2	
I 8	Injector No.3	
I 9	Injector No.4	
I10	Ignition SW	90980–11778
J 1	Junction Connector	90980–10803
J 2	Junction Connector	90980–11542
J 3	Junction Connector	90980–11686
J 4	Junction Connector	90980–11661
J 5	Junction Connector	
J 6	Junction Connector	90980–11915
J 7	Junction Connector	90980–11542
J 8	Junction Connector	90980–11915
J 9	Junction Connector	90980–11542
J10	Junction Connector	90980–11686
J11	Junction Connector	90980–11542
J12	Junction Connector	90980–11661
J13	Junction Connector	
J14	Junction Connector	90980–11686
K 1	Knock Sensor	90980–11166
L 1	License Plate Light LH	90980–11148
L 2	License Plate Light RH	
L 3	Luggage Compartment Light	90980–10121
L 4	Luggage Compartment Light SW	90980–10871
M 1	Mass Air Flow Meter	90980–11317
M 2	Moon Roof Control Relay and Motor	90980–10997
M 3	Moon Roof Control SW and Personal Light	90980–11533
N 1	Noise Filter (Ignition System)	90980–11156
N 2	Noise Filter (Rear Window Defogger)	90980–10825
O 1	O/D Direct Clutch Speed Sensor	90980–11156
O 2	Oil Pressure SW	90980–11363
O 3	O/D Main SW	90980–11011
P 1	Park/Neutral Position SW	90980–11784
P 2	Power Steering Oil Pressure SW	90980–11428
P 3	Parking Brake SW	90980–10871
P 4	Power Window Lock SW	90980–10997
P 5	Power Window Master SW	90980–11973
P 6	Personal Light (w/o Moon Roof)	90980–11148

Code	Part Name	Part Number
P 7	Power Window Motor LH	90980–10860
P 8	Power Window Motor RH	
P 9	Pretensioner LH	90980–11862
P10	Pretensioner RH	
R 1	Radiator Fan Motor	90980–10928
R 2	Radio and Player	90980–10997
R 3	Radio and Player	90980–10996
R 4	Radio and Player	90980–12038
R 5	Rheostat	90980–10908
R 6	Rear Combination Light LH	90980–11011
R 7	Rear Combination Light RH	
R 8	Rear Speaker LH	90980–10935
R 9	Rear Speaker RH	
R10	Rear Window Defogger	90980–10913
R11	Rear Window Defogger	90980–10914
R12	Rear Wiper Motor and Relay	90980–10908
R13	Remote Control Mirror LH	90980–11587
R14	Remote Control Mirror RH	
R15	Remote Control Mirror SW	90980–11657
S 1	Starter	90980–11400
S 2	Starter	90980–09506
S 3	Shift Lock Control ECU	90980–11909
S 4	Side Airbag Squib LH	90980–11864
S 5	Side Airbag Squib RH	
S 6	Stereo Component Amplifier	90980–10848
S 7	Stereo Component Amplifier	90980–11913
S 8	Stop Light SW	90980–11118
S 9	Side Airbag Sensor LH	90980–11857
S10	Side Airbag Sensor RH	
T 1	Throttle Position Sensor	90980–11261
T 2	Turn Signal Flasher Relay	82751–07010
T 3	Tension Reducer Solenoid LH	90980–11369
T 4	Tension Reducer Solenoid RH	
U 1	Unlock Warning SW	90980–10860
V 1	Vehicle Speed Sensor (Combination Meter)	90980–11143
V 2	Vehicle Speed Sensor (Electronically Controlled Transmission)	90980–11156
V 3	VSV (ACIS)	
V 4	VSV (Canister Closed Valve)	90980–11162
V 5	VSV (EVAP)	90980–11156
V 6	Vapor Pressure Sensor	90980–11143
V 7	VSV (Pressure Switching Valve)	90980–11859
W 1	Washer Motor	90980–10981
W 2	Woofer Speaker LH	90980–10795
W 3	Woofer Speaker RH	

(Cont. next page)

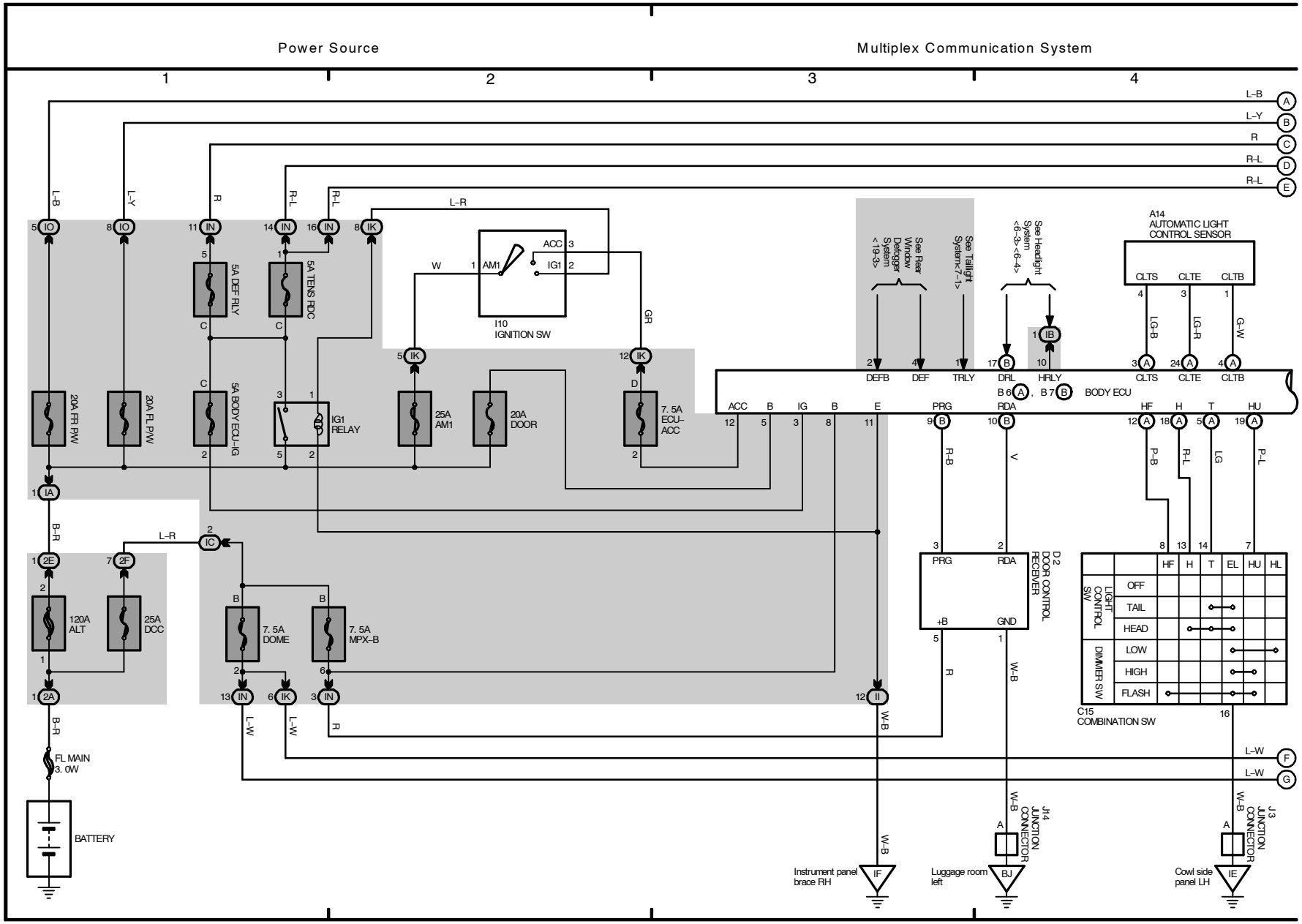

1 CELICA (Cont' d)

(Cont. next page)

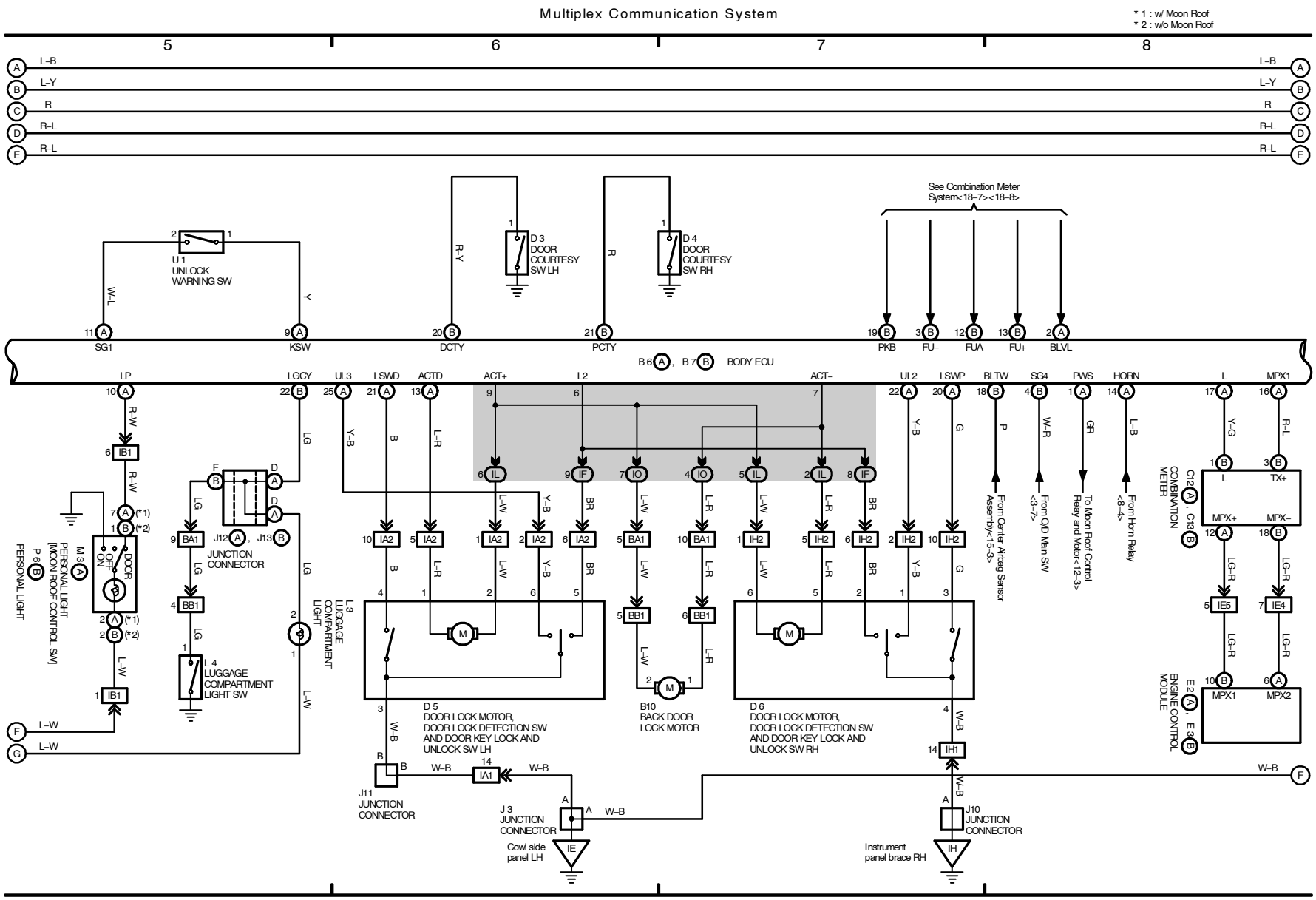

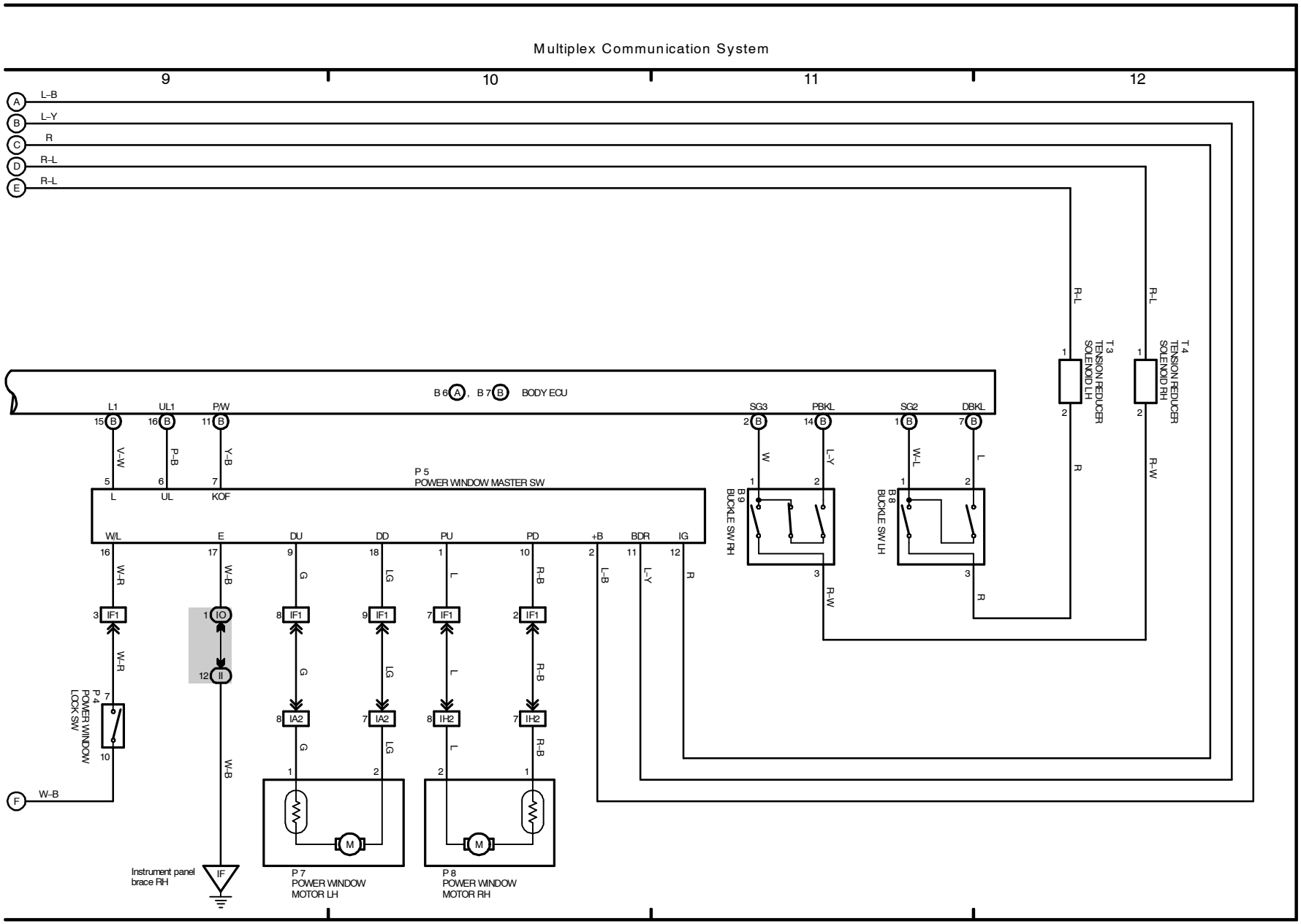
Multiplex Communication System
9
10
11
12
L–B
L–Y
R
R–L
R–L
B 6 A, B 7 B BODY ECU
L1
UL1
P/W
SG3
PBKL
SG2
DBKL
V–W
P–B
Y–B
W
L–Y
W–L
L
P 5
POWER WINDOW MASTER SW
L
UL
KOF
W/L
E
DU
DD
PU
PD
+B
BDR
IG
W–R
W–B
G
LG
L
R–B
L–B
L–Y
R
R–W
R
IF1
IO
II
IA2
IH2
P 4
POWER WINDOW
LOCK SW
W–B
W–B
B 9
BUCKLE SW RH
B 8
BUCKLE SW LH
T 3
TENSION REDUCER
SOLENOID LH
T 4
TENSION REDUCER
SOLENOID RH
Instrument panel
brace RH
IF
P 7
POWER WINDOW
MOTOR LH
P 8
POWER WINDOW
MOTOR RH
M

(Cont. next page)

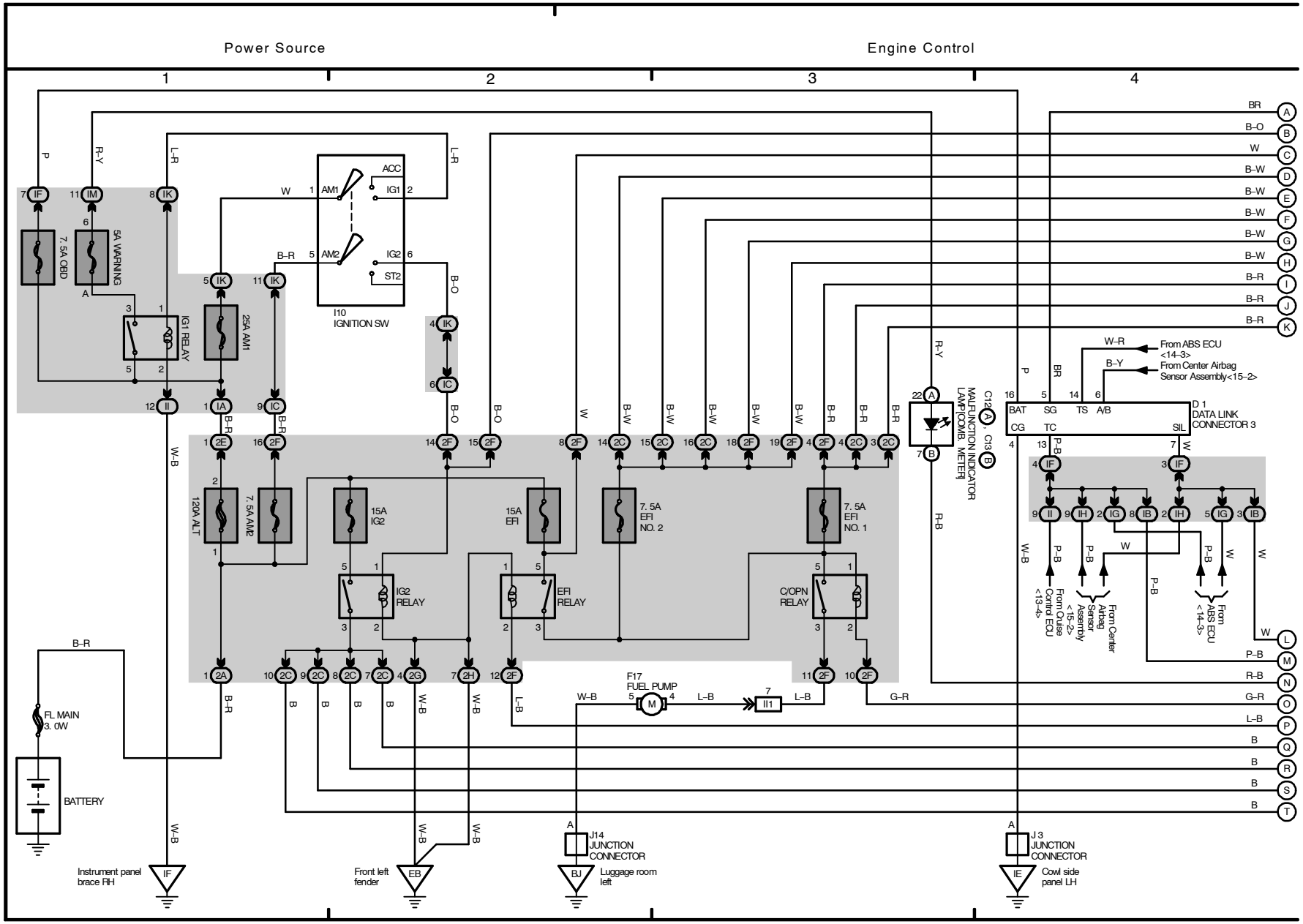

(Cont. next page)

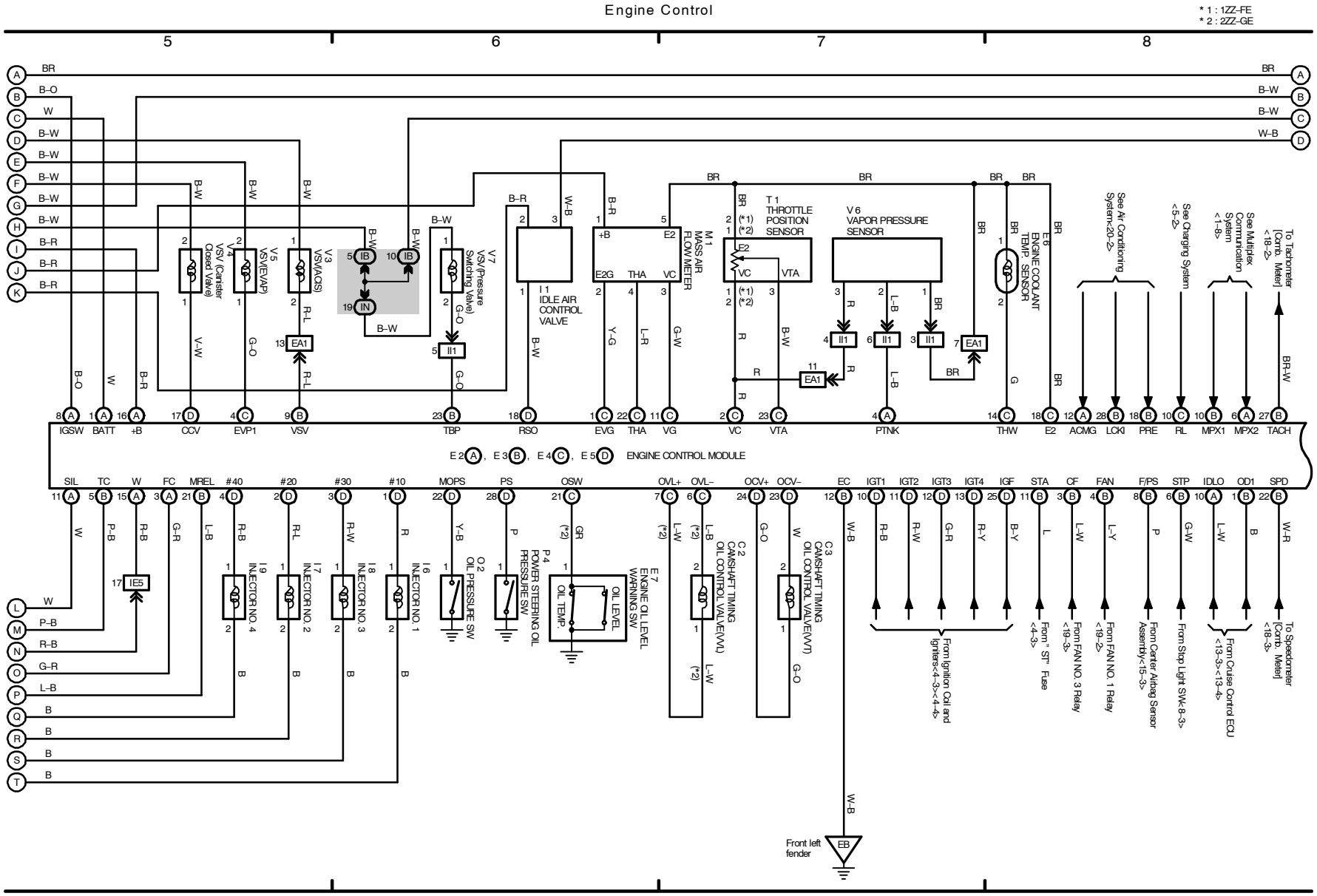

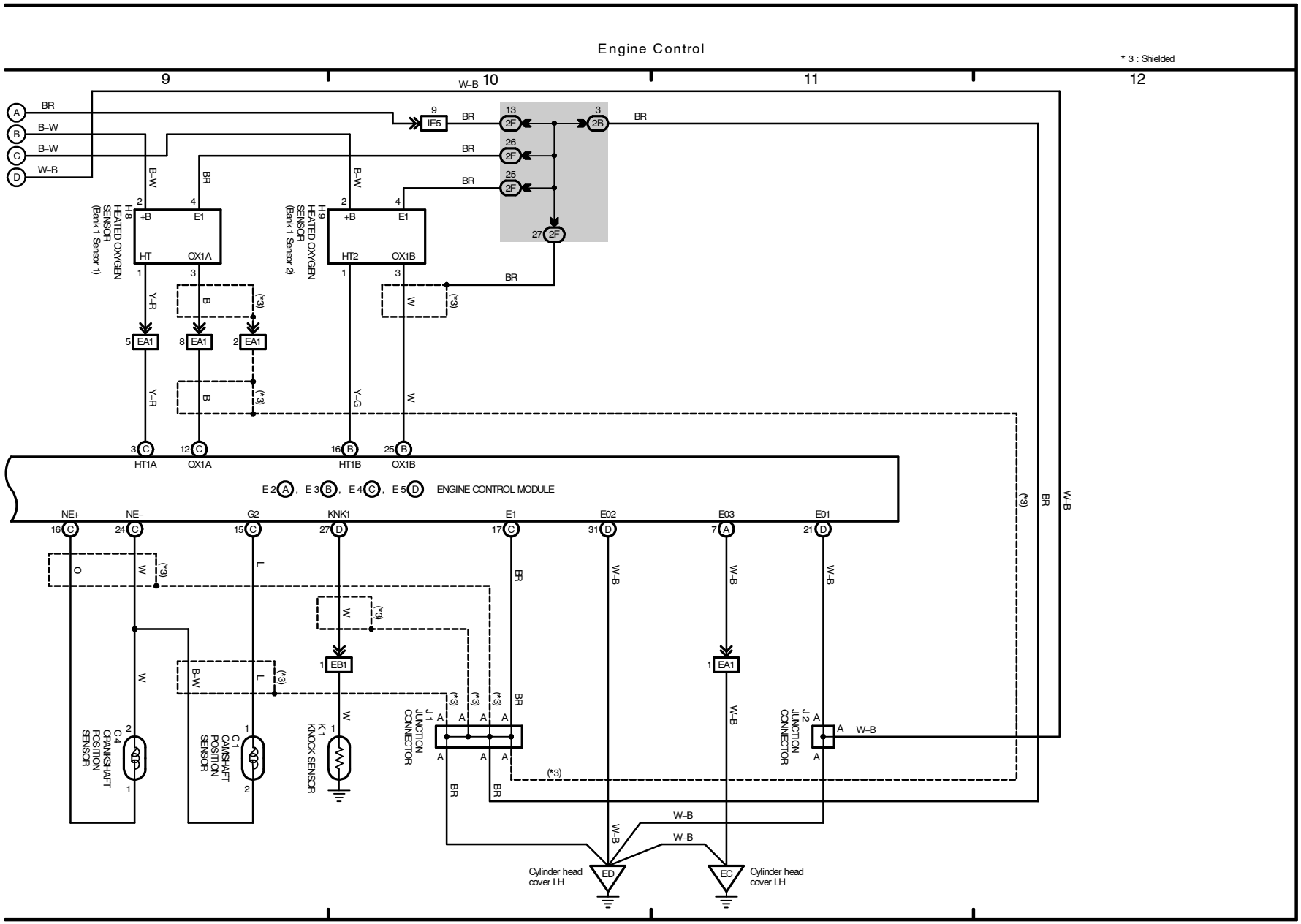
Engine Control
* 3 : Shielded
9
10
11
12
W–B
BR
B–W
W–B
IE5
2F
2B
HT6 HEATED OXYGEN SENSOR (Bank 1 Sensor 1)
HT6 HEATED OXYGEN SENSOR (Bank 1 Sensor 2)
+B
E1
HT
OX1A
HT2
OX1B
Y–R
B
W
Y–G
EA1
(*3)
HT1A
OX1A
HT1B
OX1B
E 2 A, E 3 B, E 4 C, E 5 D ENGINE CONTROL MODULE
NE+
NE–
G2
KNK1
E1
E02
E03
E01
O
L
EB1
C 4 CRANKSHAFT POSITION SENSOR
C 1 CAMSHAFT POSITION SENSOR
K 1 KNOCK SENSOR
J 1 JUNCTION CONNECTOR
J 2 JUNCTION CONNECTOR
Cylinder head cover LH
ED
EC
Cylinder head cover LH

3 CELICA

(Cont. next page)

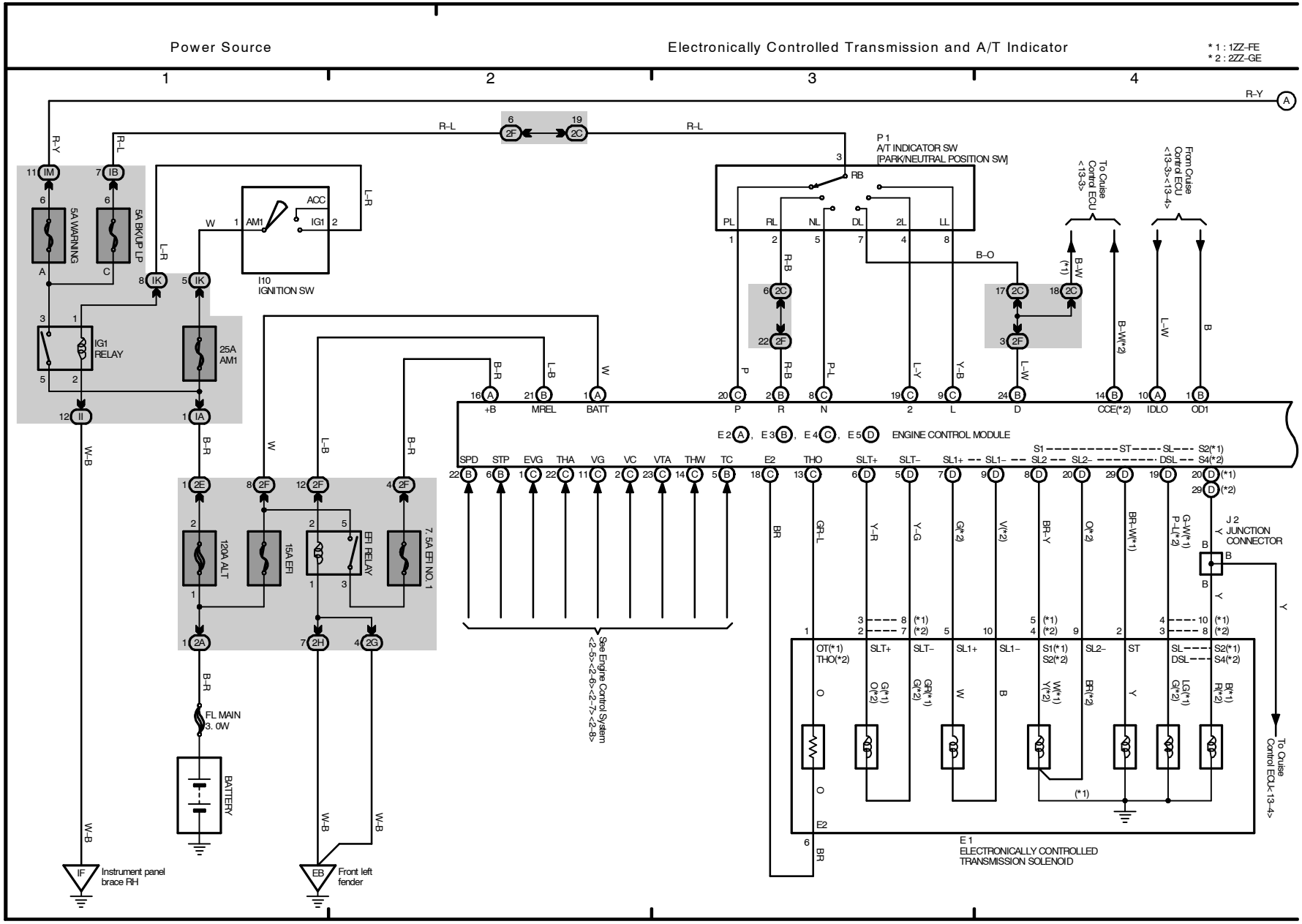

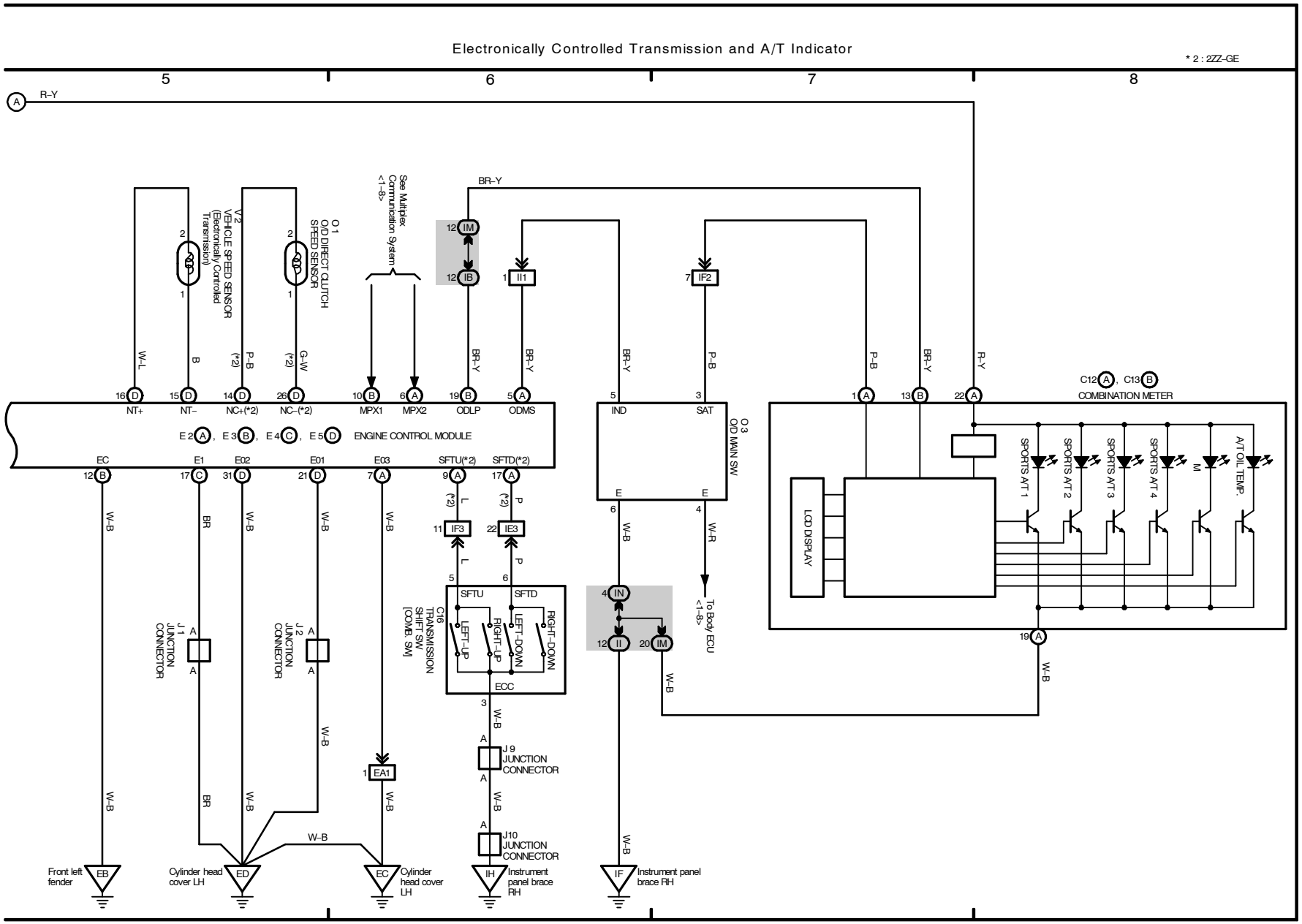
Electronically Controlled Transmission and A/T Indicator
* 2 : 2ZZ-GE
5
6
7
8
R-Y
BR-Y
See Multiplex Communication System <1-8>
V2 VEHICLE SPEED SENSOR (Electronically Controlled Transmission)
O1 O/D DIRECT CLUTCH SPEED SENSOR
NT+
NT-
NC+(*2)
NC-(*2)
MPX1
MPX2
ODLP
ODMS
IND
SAT
O3 O/D MAIN SW
E2, E3, E4, E5 ENGINE CONTROL MODULE
EC
E1
E02
E01
E03
SFTU(*2)
SFTD(*2)
C12, C13
COMBINATION METER
LCD DISPLAY
SPORTS A/T 1
SPORTS A/T 2
SPORTS A/T 3
SPORTS A/T 4
M
A/T OIL TEMP.
To Body ECU <1-8>
C16 TRANSMISSION SHIFT SW [COMB. SW]
SFTU
SFTD
LEFT-UP
RIGHT-UP
LEFT-DOWN
RIGHT-DOWN
ECC
J1 JUNCTION CONNECTOR
J2 JUNCTION CONNECTOR
J9 JUNCTION CONNECTOR
J10 JUNCTION CONNECTOR
Front left fender
Cylinder head cover LH
Cylinder head cover LH
Instrument panel brace RH
Instrument panel brace RH

4 CELICA

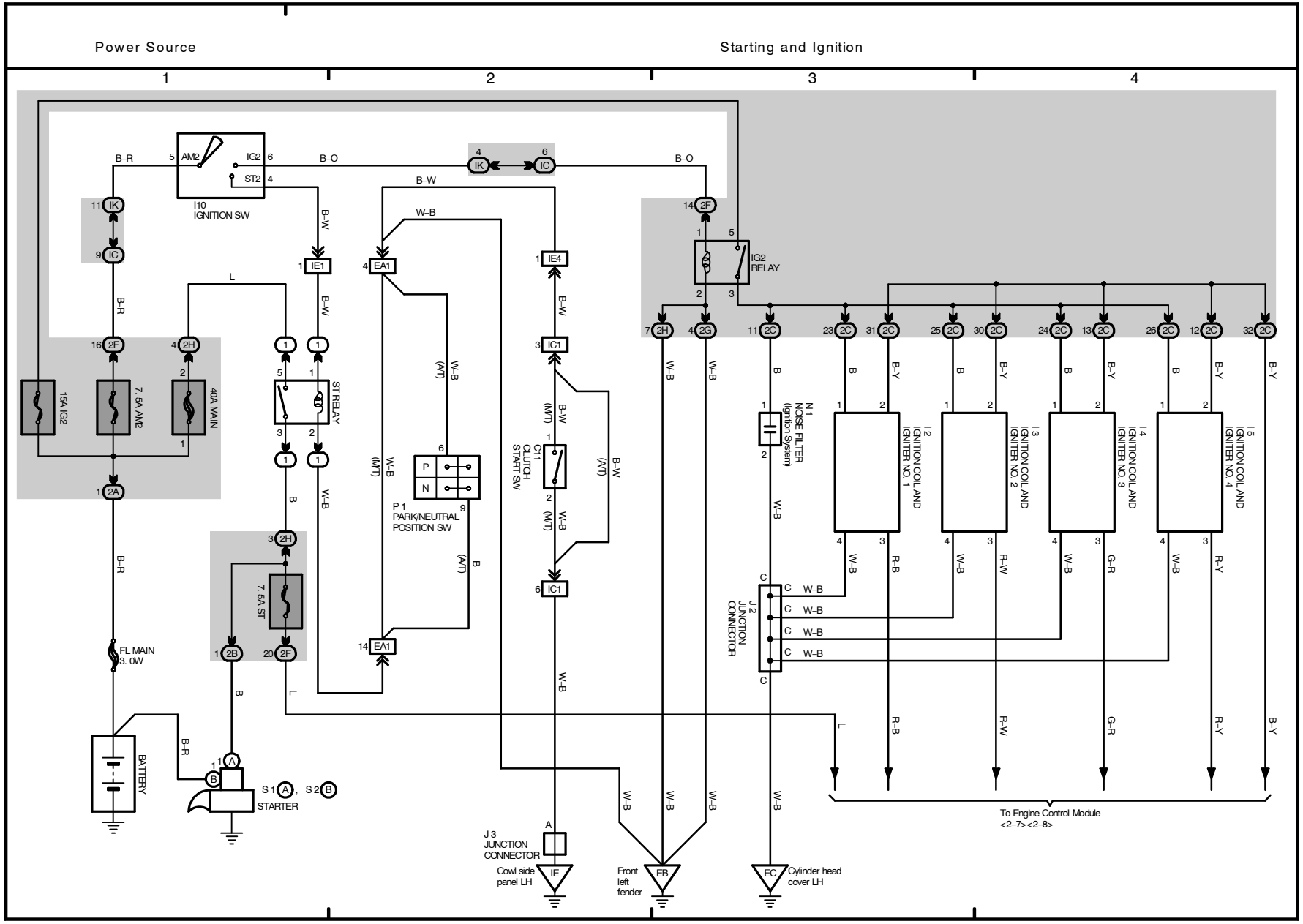
Power Source
Starting and Ignition
1
2
3
4
I10
IGNITION SW
AM2
IG2
ST2
IG2
RELAY
15A IG2
7. 5A AM2
40A MAIN
ST RELAY
7. 5A ST
FL MAIN
3. 0W
BATTERY
S1 A, S2 B
STARTER
P1
PARK/NEUTRAL
POSITION SW
C11
CLUTCH
START SW
N1
NOISE FILTER
(Ignition System)
I2
IGNITION COIL AND
IGNITER NO. 1
I3
IGNITION COIL AND
IGNITER NO. 2
I4
IGNITION COIL AND
IGNITER NO. 3
I5
IGNITION COIL AND
IGNITER NO. 4
J2
JUNCTION
CONNECTOR
J3
JUNCTION
CONNECTOR
Cowl side
panel LH
Front
left
fender
Cylinder head
cover LH
To Engine Control Module
<2-7><2-8>

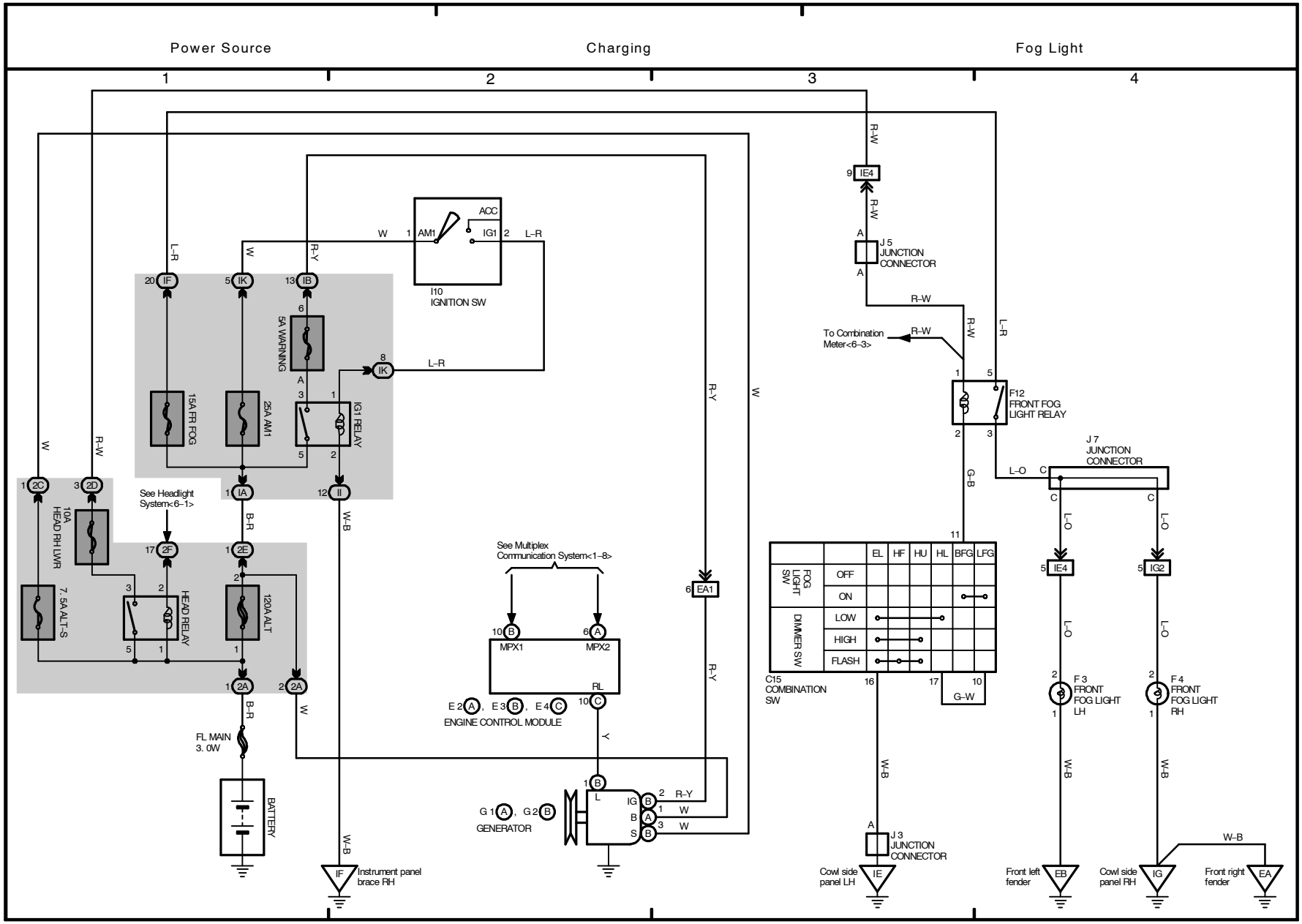
Power Source
Charging
Fog Light
1
2
3
4
ACC
AM1
IG1
I10
IGNITION SW
5A WARNING
15A FR FOG
25A AM1
IG1 RELAY
10A HEAD RH LWR
7. 5A ALT–S
HEAD RELAY
120A ALT
See Headlight System<6–1>
See Multiplex Communication System<1–8>
MPX1
MPX2
ENGINE CONTROL MODULE
FL MAIN 3. 0W
BATTERY
GENERATOR
Instrument panel brace RH
J 5 JUNCTION CONNECTOR
To Combination Meter<6–3>
F12 FRONT FOG LIGHT RELAY
J 7 JUNCTION CONNECTOR
FOG LIGHT SW
DIMMER SW
OFF
ON
LOW
HIGH
FLASH
EL
HF
HU
HL
BFG
LFG
C15 COMBINATION SW
J 3 JUNCTION CONNECTOR
Cowl side panel LH
Front left fender
Cowl side panel RH
Front right fender
F 3 FRONT FOG LIGHT LH
F 4 FRONT FOG LIGHT RH

6 CELICA

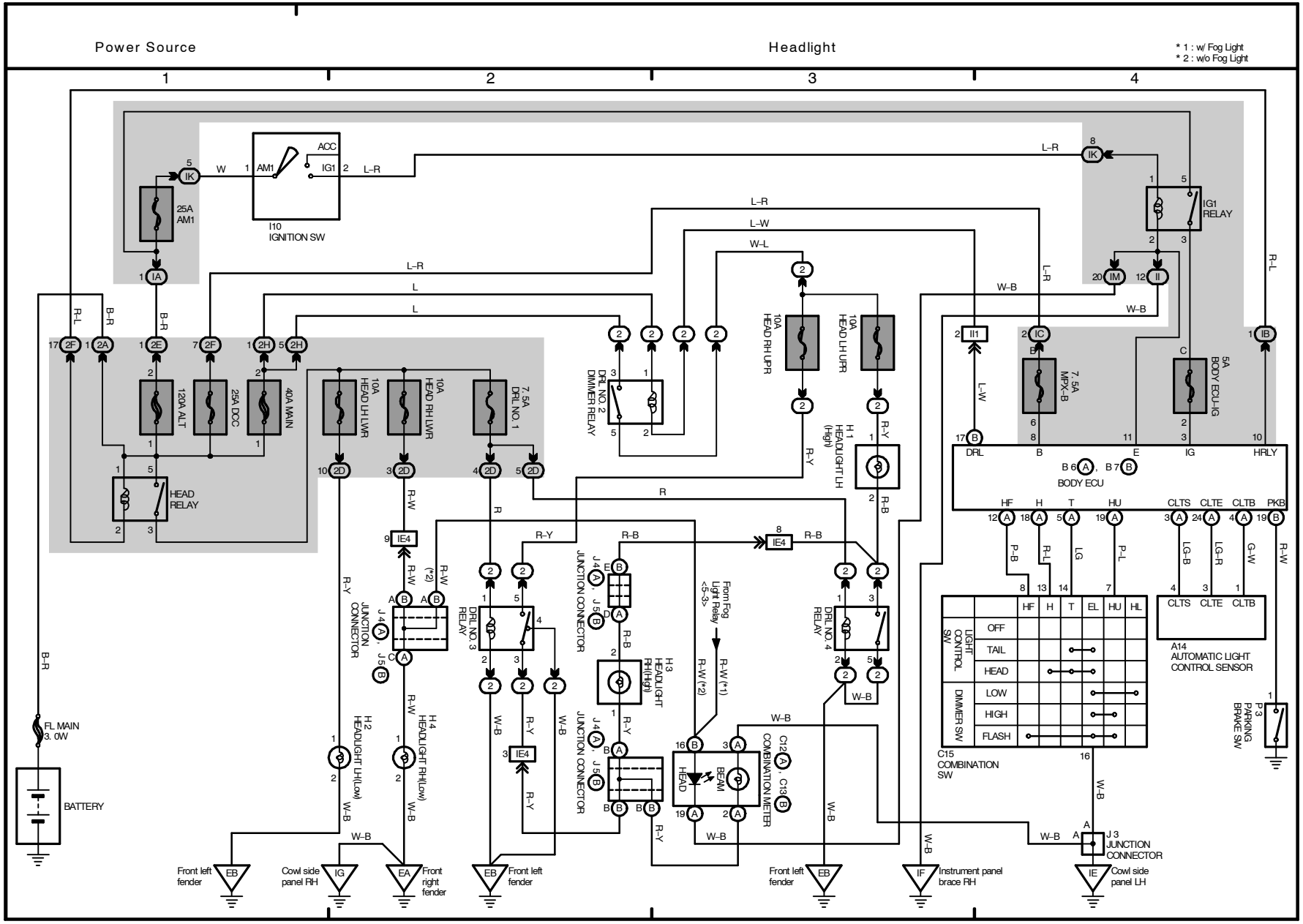
Power Source
Headlight
* 1 : w/ Fog Light
* 2 : w/o Fog Light
25A AM1
I10 IGNITION SW
ACC
IG1
AM1
IG1 RELAY
120A ALT
25A DCC
40A MAIN
10A HEAD LH LWR
10A HEAD RH LWR
7.5A DRL NO. 1
DRL NO. 2 DIMMER RELAY
10A HEAD RH UPR
10A HEAD LH UPR
H1 HEADLIGHT LH (High)
7.5A MPX-B
5A BODY ECU-IG
HEAD RELAY
BODY ECU
DRL
HRLY
JUNCTION CONNECTOR
DRL NO. 3 RELAY
DRL NO. 4 RELAY
From Fog Light Relay <5-3>
H3 HEADLIGHT RH(High)
H2 HEADLIGHT LH(Low)
H4 HEADLIGHT RH(Low)
HEAD
BEAM
COMBINATION METER
C15 COMBINATION SW
LIGHT CONTROL SW
DIMMER SW
OFF
TAIL
HEAD
LOW
HIGH
FLASH
A14 AUTOMATIC LIGHT CONTROL SENSOR
P3 PARKING BRAKE SW
J3 JUNCTION CONNECTOR
FL MAIN 3. 0W
BATTERY
Front left fender
Cowl side panel RH
Front right fender
Instrument panel brace RH
Cowl side panel LH

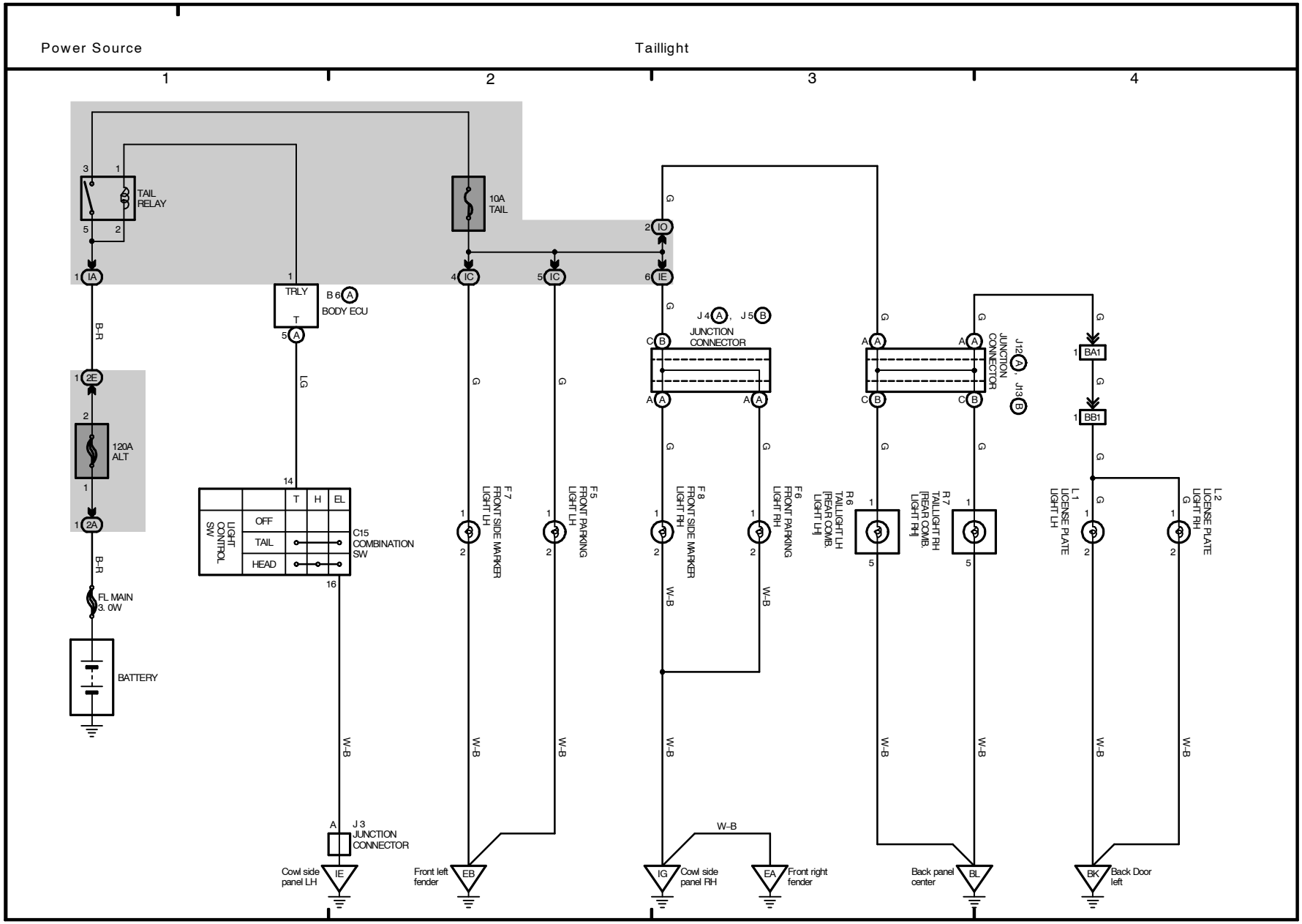
Power Source
Taillight
1
2
3
4
TAIL RELAY
10A TAIL
TRLY
B 6
BODY ECU
120A ALT
FL MAIN 3. 0W
BATTERY
LIGHT CONTROL SW
OFF
TAIL
HEAD
T
H
EL
C15 COMBINATION SW
J 3 JUNCTION CONNECTOR
Cowl side panel LH
IE
F 7 FRONT SIDE MARKER LIGHT LH
F 5 FRONT PARKING LIGHT LH
Front left fender
EB
J 4
J 5
JUNCTION CONNECTOR
F 8 FRONT SIDE MARKER LIGHT RH
F 6 FRONT PARKING LIGHT RH
IG
Cowl side panel RH
EA
Front right fender
R 6 TAILLIGHT LH [REAR COMB. LIGHT LH]
R 7 TAILLIGHT RH [REAR COMB. LIGHT RH]
J12
J13
JUNCTION CONNECTOR
Back panel center
BL
BA1
BB1
L 1 LICENSE PLATE LIGHT LH
L 2 LICENSE PLATE LIGHT RH
BK
Back Door left

8 CELICA

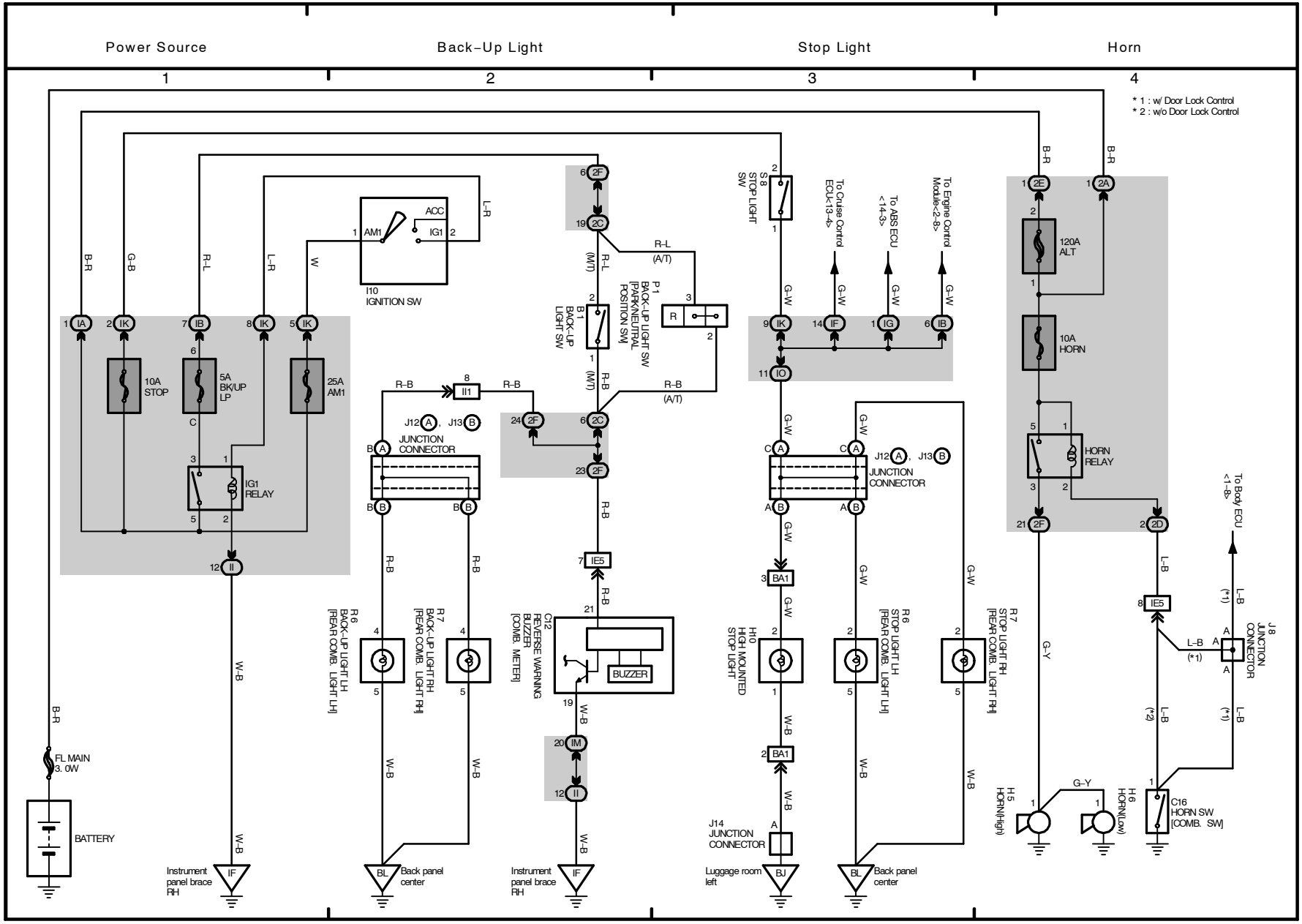
Power Source
Back-Up Light
Stop Light
Horn
1
2
3
4
* 1 : w/ Door Lock Control
* 2 : w/o Door Lock Control
FL MAIN 3. 0W
BATTERY
10A STOP
5A BK/UP LP
25A AM1
IG1 RELAY
I10 IGNITION SW
ACC
IG1
AM1
B1 BACK-UP LIGHT SW
P1 BACK-UP LIGHT SW [PARK/NEUTRAL POSITION SW]
(M/T)
(A/T)
JUNCTION CONNECTOR
J12, J13
R6 BACK-UP LIGHT LH [REAR COMB. LIGHT LH]
R7 BACK-UP LIGHT RH [REAR COMB. LIGHT RH]
C12 REVERSE WARNING BUZZER [COMB. METER]
BUZZER
Instrument panel brace RH
Back panel center
S8 STOP LIGHT SW
To Cruise Control ECU<13-4>
To ABS ECU <14-3>
To Engine Control Module<2-8>
H10 HIGH MOUNTED STOP LIGHT
R6 STOP LIGHT LH [REAR COMB. LIGHT LH]
R7 STOP LIGHT RH [REAR COMB. LIGHT RH]
J14 JUNCTION CONNECTOR
Luggage room left
120A ALT
10A HORN
HORN RELAY
To Body ECU <1-8>
J8 JUNCTION CONNECTOR
H5 HORN(High)
H6 HORN(Low)
C16 HORN SW [COMB. SW]

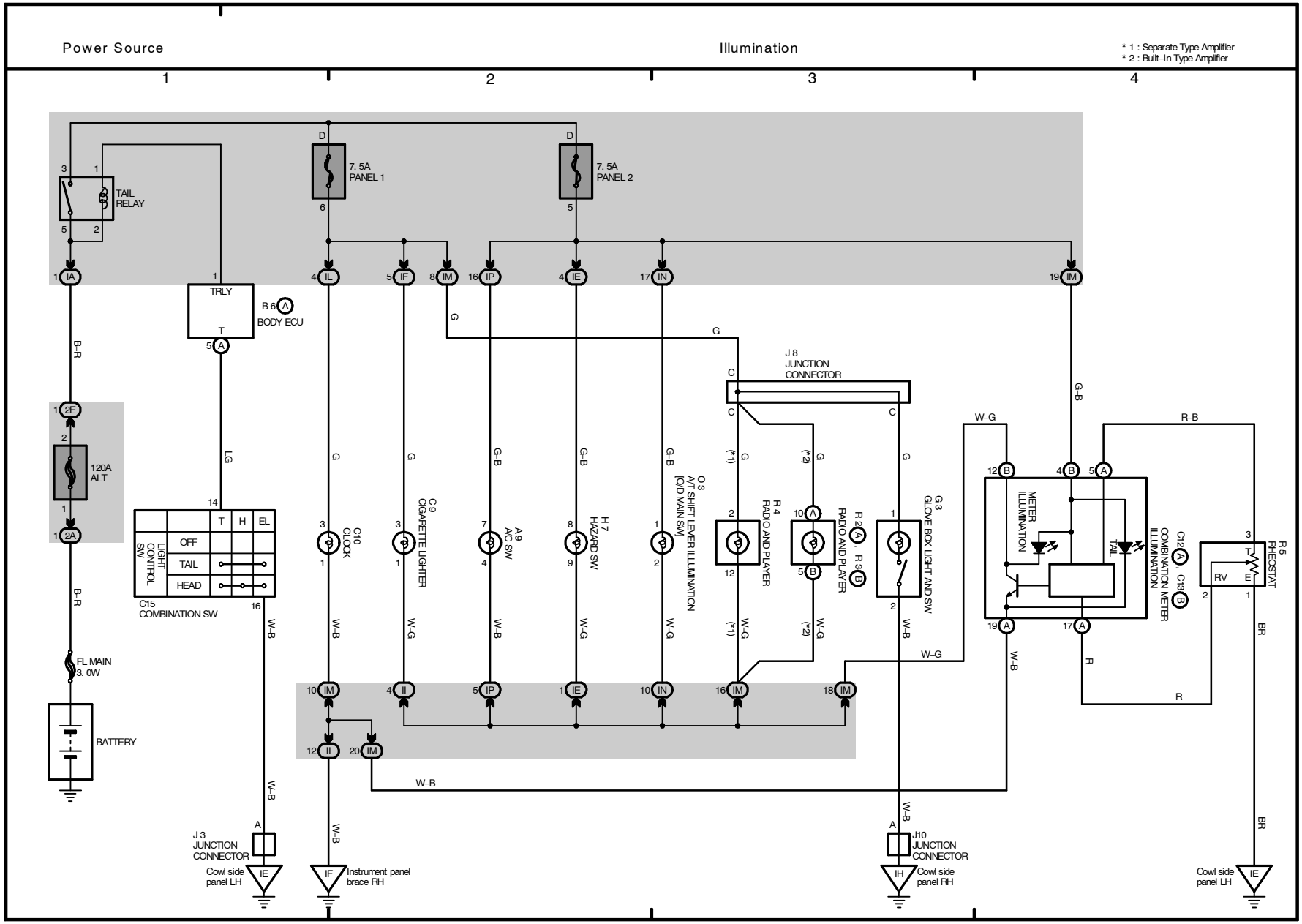
Power Source
Illumination
* 1 : Separate Type Amplifier
* 2 : Built-In Type Amplifier
1
2
3
4
TAIL RELAY
7. 5A PANEL 1
7. 5A PANEL 2
TRLY
B 6 A
BODY ECU
120A ALT
FL MAIN 3. 0W
BATTERY
C15 COMBINATION SW
LIGHT CONTROL SW
OFF
TAIL
HEAD
T H EL
J 3 JUNCTION CONNECTOR
Cowl side panel LH
Instrument panel brace RH
J 8 JUNCTION CONNECTOR
C10 CLOCK
C 9 CIGARETTE LIGHTER
A 9 A/C SW
H 7 HAZARD SW
O 3 A/T SHIFT LEVER ILLUMINATION [O/D MAIN SW]
R 4 RADIO AND PLAYER
R 2 A , R 3 B
RADIO AND PLAYER
G 3 GLOVE BOX LIGHT AND SW
J10 JUNCTION CONNECTOR
Cowl side panel RH
METER ILLUMINATION
TAIL
C12 A , C13 B
COMBINATION METER ILLUMINATION
R 5 RHEOSTAT
Cowl side panel LH

M OVERALL ELECTRICAL WIRING DIAGRAM

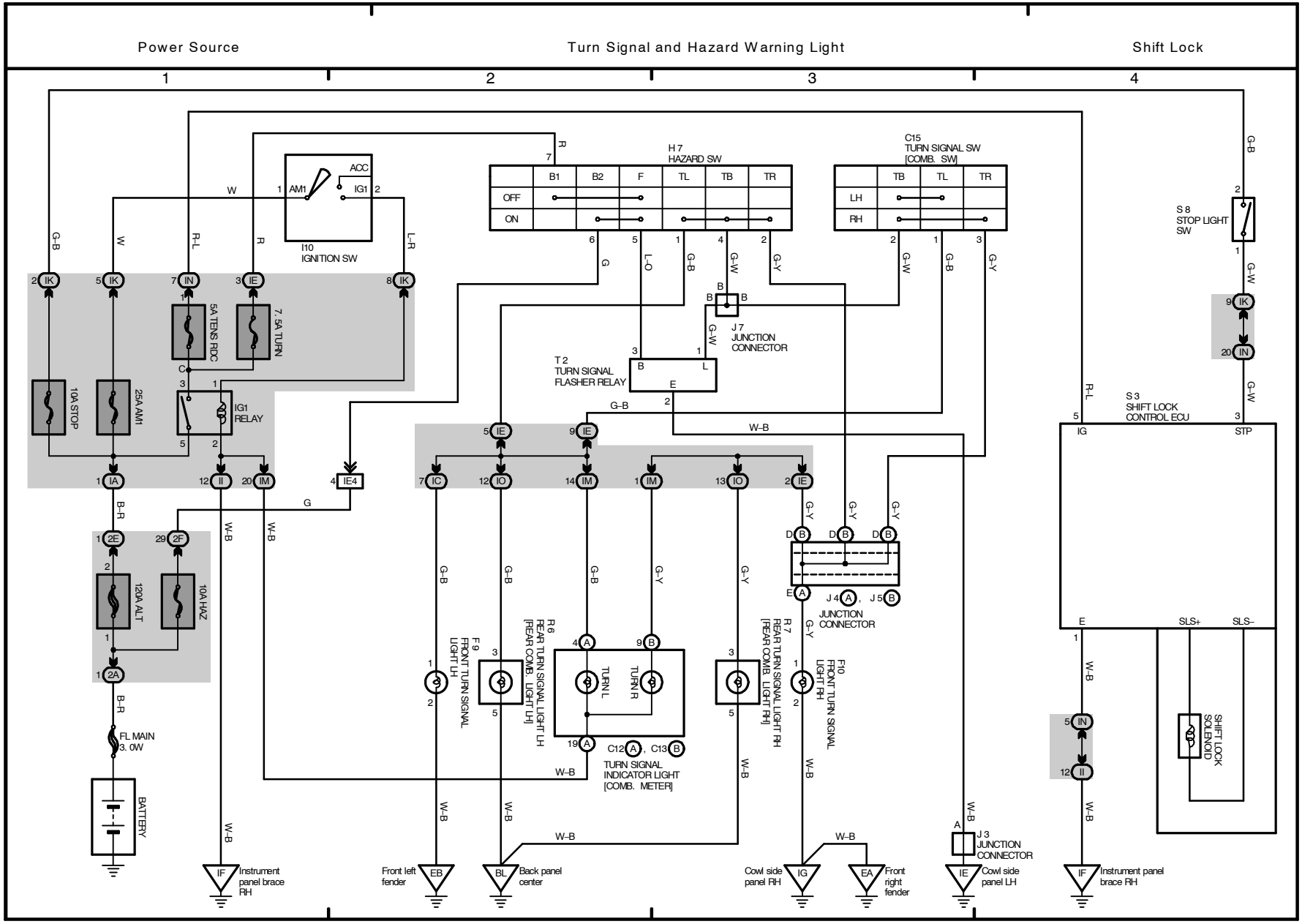

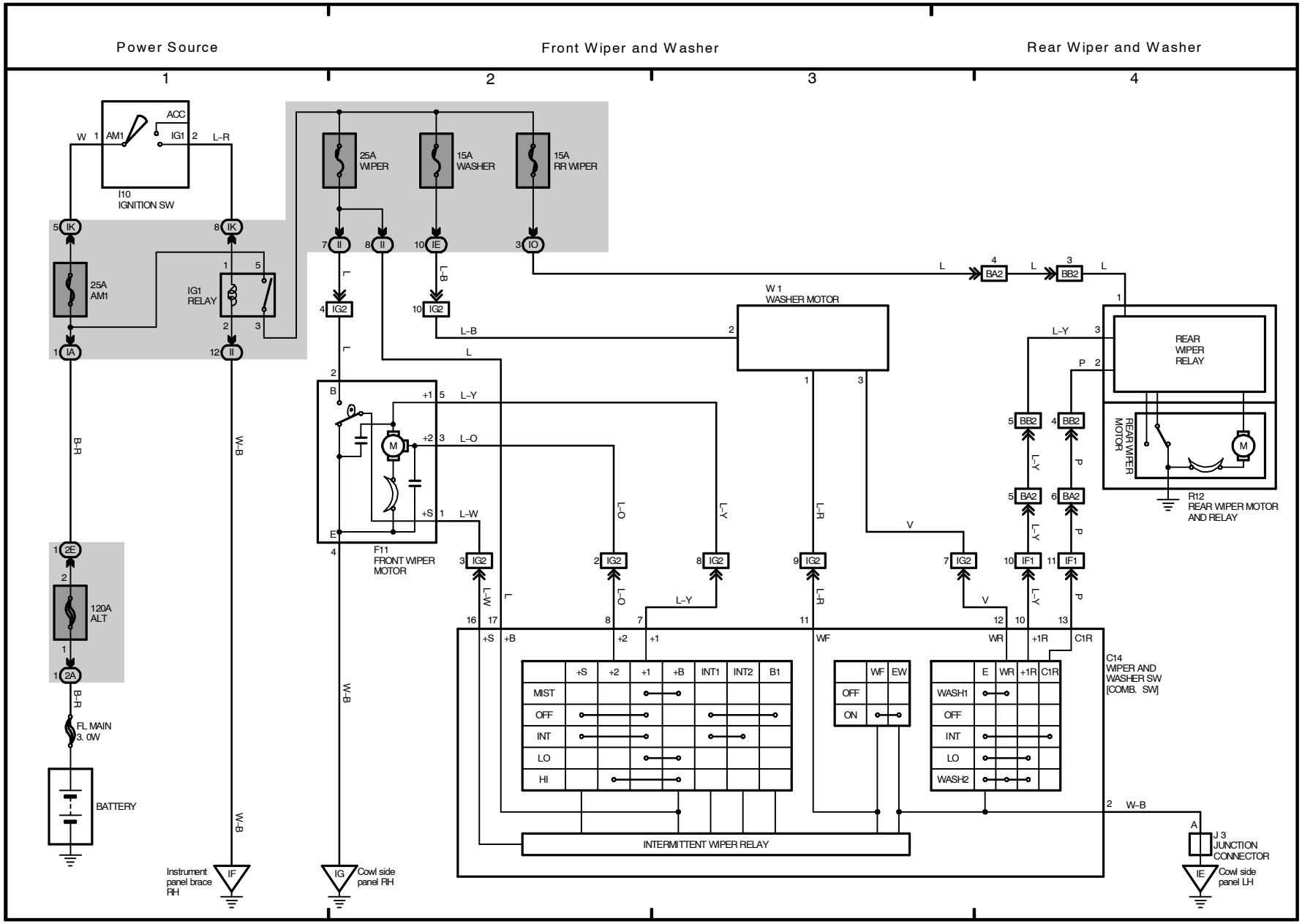
Power Source
Front Wiper and Washer
Rear Wiper and Washer
1
2
3
4
ACC
AM1
IG1
I10
IGNITION SW
25A
AM1
IG1
RELAY
25A
WIPER
15A
WASHER
15A
RR WIPER
W 1
WASHER MOTOR
REAR
WIPER
RELAY
REAR WIPER
MOTOR
R12
REAR WIPER MOTOR
AND RELAY
F11
FRONT WIPER
MOTOR
120A
ALT
FL MAIN
3. 0W
BATTERY
C14
WIPER AND
WASHER SW
[COMB. SW]
MIST
OFF
INT
LO
HI
WASH1
WASH2
INTERMITTENT WIPER RELAY
J 3
JUNCTION
CONNECTOR
Instrument
panel brace
RH
Cowl side
panel RH
Cowl side
panel LH

12 CELICA

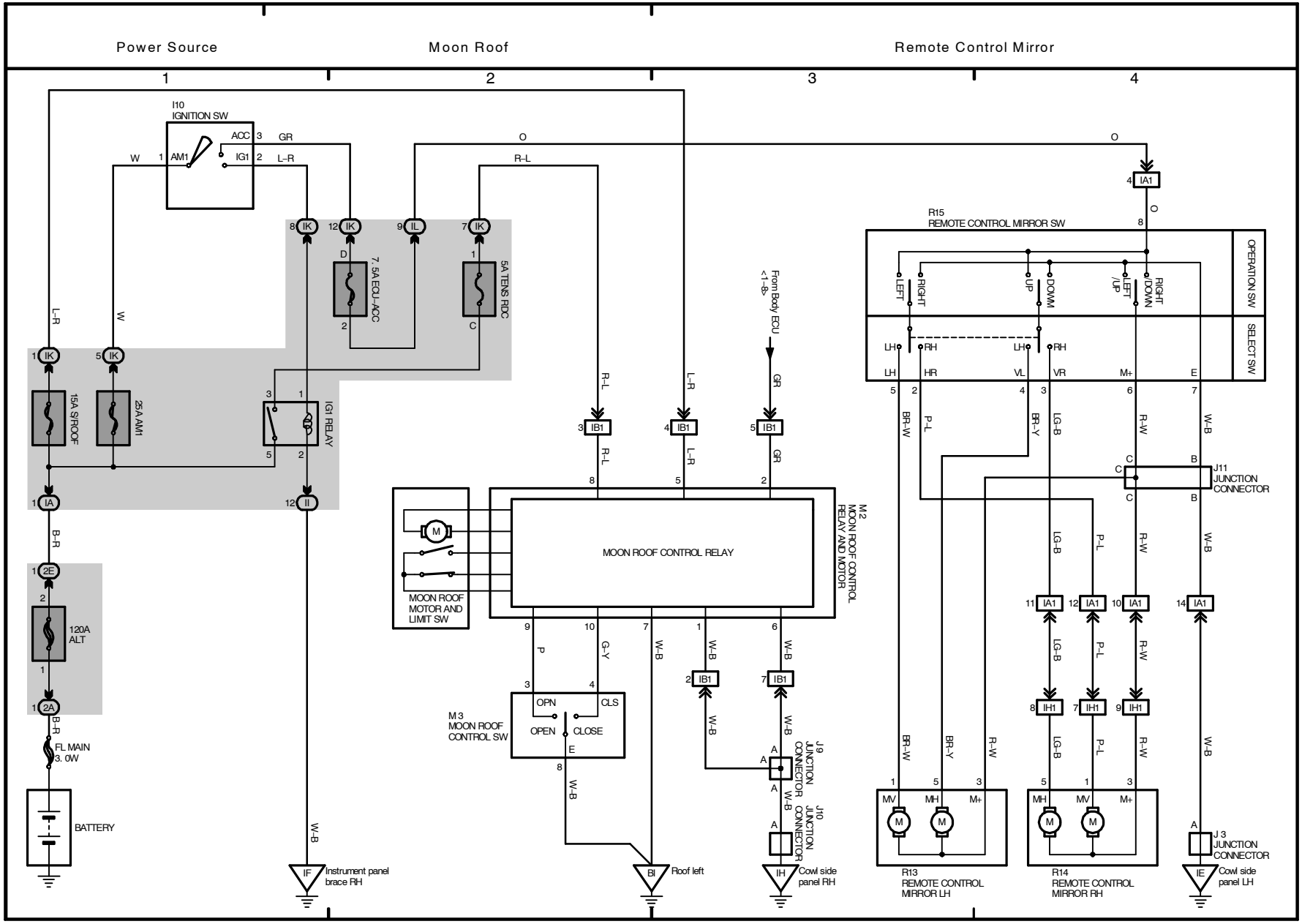
Power Source
Moon Roof
Remote Control Mirror
1
2
3
4
I10
IGNITION SW
ACC
IG1
AM1
7.5A ECU-ACC
5A TENS RDC
15A S/ROOF
25A AM1
IG1 RELAY
120A ALT
FL MAIN 3.0W
BATTERY
From Body ECU <1-8>
MOON ROOF CONTROL RELAY
M2 MOON ROOF CONTROL RELAY AND MOTOR
MOON ROOF MOTOR AND LIMIT SW
M3 MOON ROOF CONTROL SW
OPN
CLS
OPEN
CLOSE
J9 JUNCTION CONNECTOR
J10 JUNCTION CONNECTOR
Instrument panel brace RH
Roof left
Cowl side panel RH
R15 REMOTE CONTROL MIRROR SW
OPERATION SW
SELECT SW
LEFT
RIGHT
UP
DOWN
LEFT /UP
RIGHT DOWN
LH
RH
HR
VL
VR
M+
E
J11 JUNCTION CONNECTOR
R13 REMOTE CONTROL MIRROR LH
R14 REMOTE CONTROL MIRROR RH
MV
MH
J 3 JUNCTION CONNECTOR
Cowl side panel LH

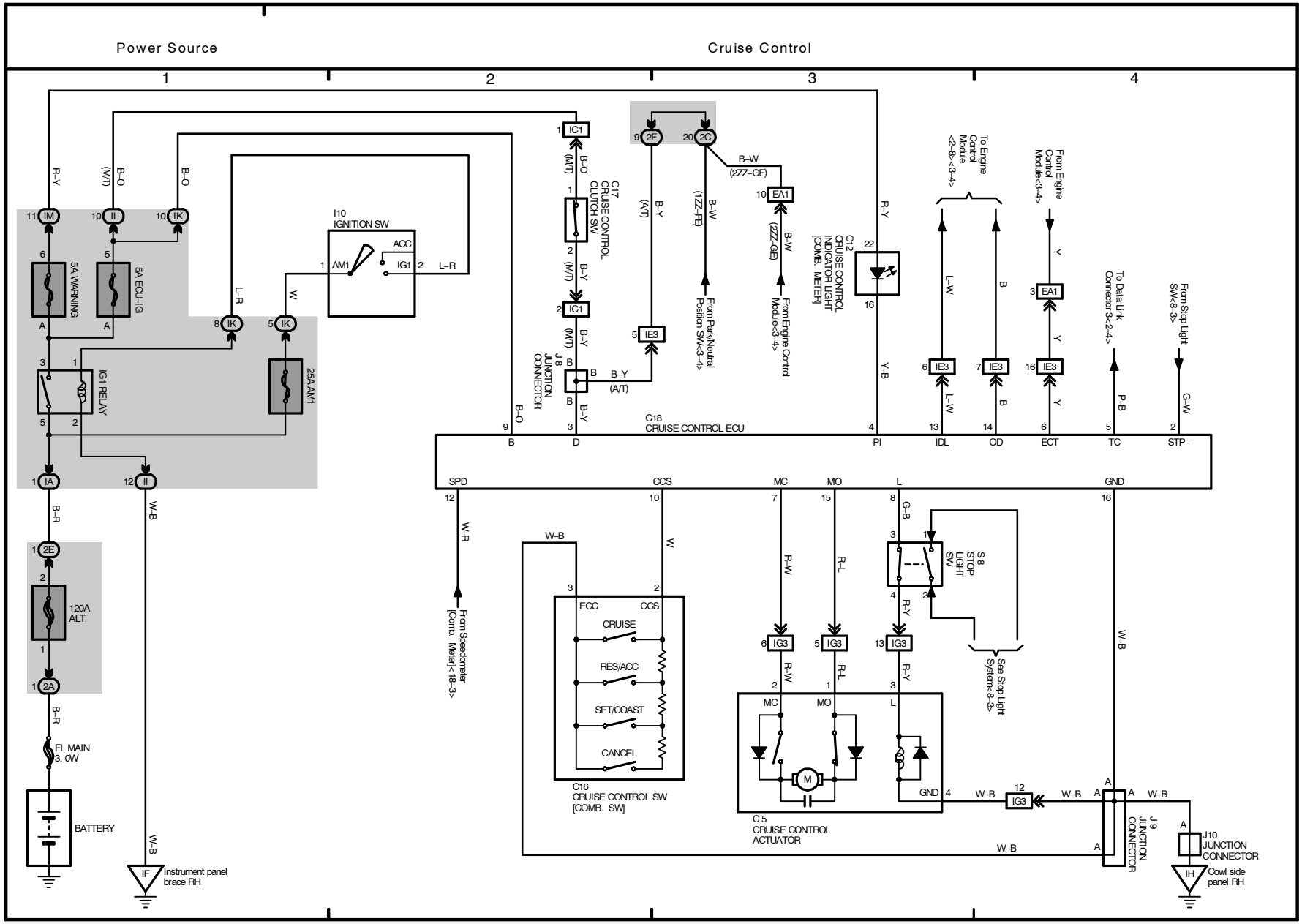
Power Source
Cruise Control
1
2
3
4
5A WARNING
5A ECU-IG
IG1 RELAY
25A AM1
I10
IGNITION SW
ACC
AM1
IG1
120A
ALT
FL MAIN
3. 0W
BATTERY
Instrument panel
brace RH
C17
CRUISE CONTROL
CLUTCH SW
J8
JUNCTION
CONNECTOR
From Park/Neutral
Position SW<3-4>
From Engine Control
Module<3-4>
C12
CRUISE CONTROL
INDICATOR LIGHT
[COMB. METER]
To Engine
Control
Module
<2-8><3-4>
From Engine
Control
Module<3-4>
To Data Link
Connector 3<2-4>
From Stop Light
SW<8-3>
C18
CRUISE CONTROL ECU
SPD
CCS
MC
MO
L
GND
B
D
PI
IDL
OD
ECT
TC
STP-
From Speedometer
[Comb. Meter]<18-3>
C16
CRUISE CONTROL SW
[COMB. SW]
ECC
CCS
CRUISE
RES/ACC
SET/COAST
CANCEL
C5
CRUISE CONTROL
ACTUATOR
S8
STOP
LIGHT
SW
See Stop Light
System<8-3>
J9
JUNCTION
CONNECTOR
J10
JUNCTION
CONNECTOR
Cowl side
panel RH

14 CELICA

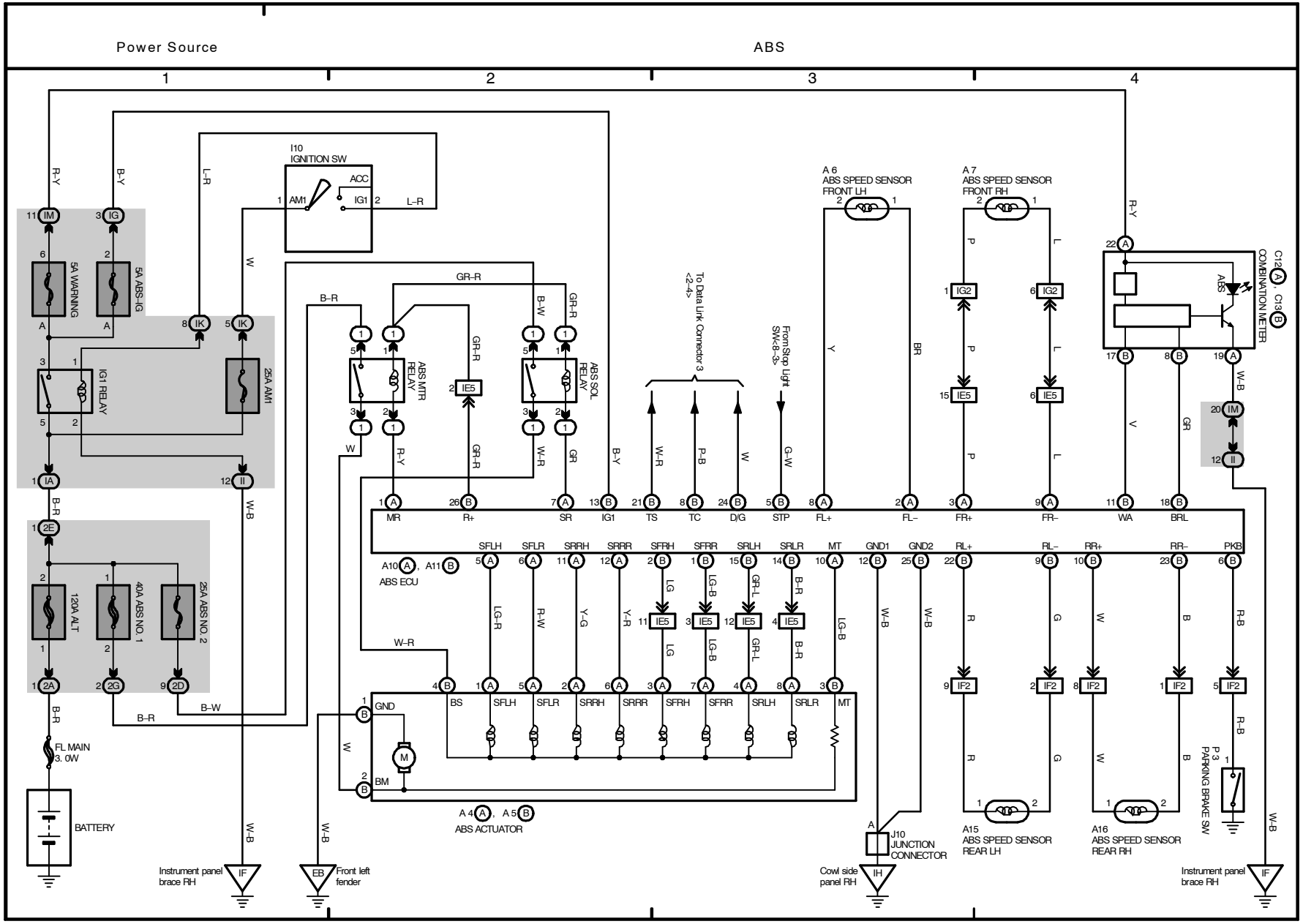
Power Source
ABS
1
2
3
4
I10
IGNITION SW
ACC
AM1
IG1
5A WARNING
5A ABS-IG
IG1 RELAY
25A AM1
ABS MTR RELAY
ABS SOL RELAY
To Data Link Connector 3 <2-4>
From Stop Light SW<8-3>
A 6
ABS SPEED SENSOR FRONT LH
A 7
ABS SPEED SENSOR FRONT RH
C12 (A), C13 (B)
COMBINATION METER
ABS
120A ALT
40A ABS NO. 1
25A ABS NO. 2
FL MAIN
3. 0W
BATTERY
A10 (A), A11 (B)
ABS ECU
A 4 (A), A 5 (B)
ABS ACTUATOR
J10
JUNCTION CONNECTOR
A15
ABS SPEED SENSOR REAR LH
A16
ABS SPEED SENSOR REAR RH
P 3
PARKING BRAKE SW
Instrument panel brace RH
Front left fender
Cowl side panel RH
Instrument panel brace RH

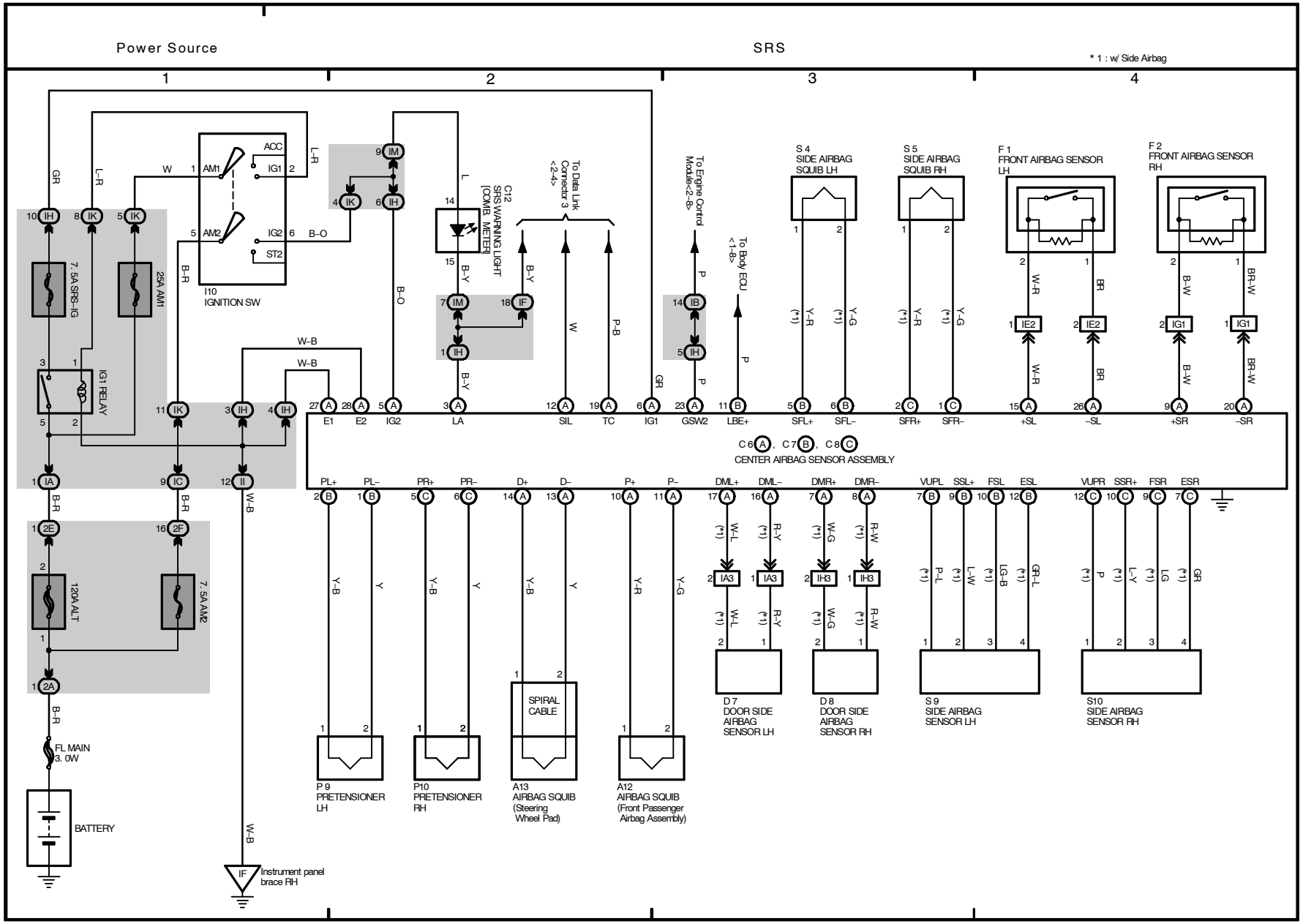
Power Source
SRS
* 1 : w/ Side Airbag
1
2
3
4
I10
IGNITION SW
ACC
IG1
IG2
ST2
AM1
AM2
7. 5A SRS–IG
25A AM1
IG1 RELAY
120A ALT
7. 5A AM2
FL MAIN
3. 0W
BATTERY
Instrument panel brace RH
C12
SRS WARNING LIGHT [COMB. METER]
To Data Link Connector 3 <2–4>
To Engine Control Module<2–8>
To Body ECU <1–8>
S 4
SIDE AIRBAG SQUIB LH
S 5
SIDE AIRBAG SQUIB RH
F 1
FRONT AIRBAG SENSOR LH
F 2
FRONT AIRBAG SENSOR RH
E1
E2
IG2
LA
SIL
TC
IG1
GSW2
LBE+
SFL+
SFL–
SFR+
SFR–
+SL
–SL
+SR
–SR
C 6 A, C 7 B, C 8 C
CENTER AIRBAG SENSOR ASSEMBLY
PL+
PL–
PR+
PR–
D+
D–
P+
P–
DML+
DML–
DMR+
DMR–
VUPL
SSL+
FSL
ESL
VUPR
SSR+
FSR
ESR
SPIRAL CABLE
P 9
PRETENSIONER LH
P10
PRETENSIONER RH
A13
AIRBAG SQUIB (Steering Wheel Pad)
A12
AIRBAG SQUIB (Front Passenger Airbag Assembly)
D 7
DOOR SIDE AIRBAG SENSOR LH
D 8
DOOR SIDE AIRBAG SENSOR RH
S 9
SIDE AIRBAG SENSOR LH
S10
SIDE AIRBAG SENSOR RH

16 CELICA

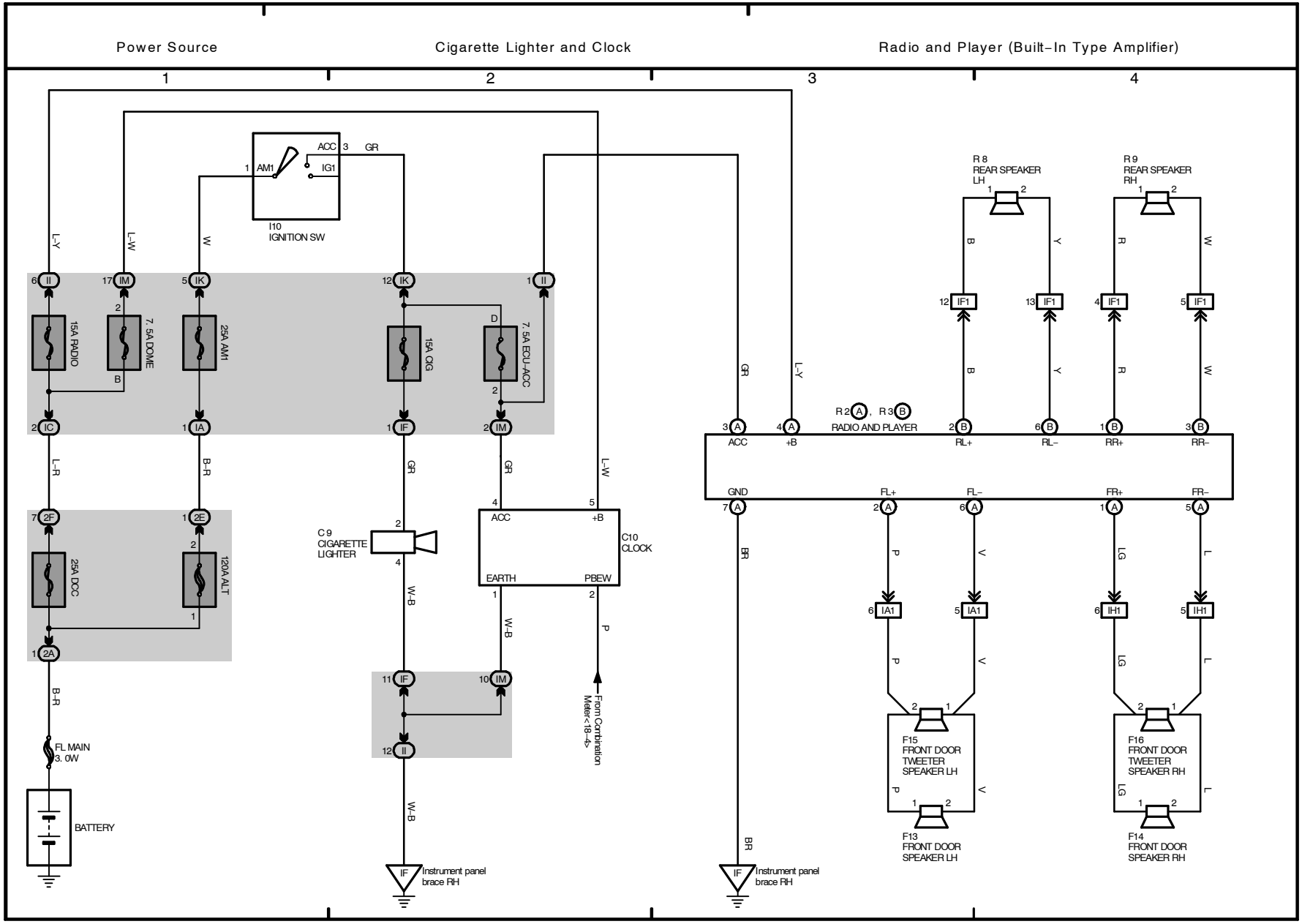
Power Source
Cigarette Lighter and Clock
Radio and Player (Built-In Type Amplifier)
1
2
3
4
I10
IGNITION SW
ACC
IG1
AM1
15A RADIO
7. 5A DOME
25A AM1
15A CIG
7. 5A ECU-ACC
25A DCC
120A ALT
FL MAIN
3. 0W
BATTERY
C 9
CIGARETTE
LIGHTER
C10
CLOCK
EARTH
PBEW
From Combination
Meter <18-4>
Instrument panel
brace RH
R 8
REAR SPEAKER
LH
R 9
REAR SPEAKER
RH
R 2 , R 3
RADIO AND PLAYER
ACC
+B
RL+
RL-
RR+
RR-
GND
FL+
FL-
FR+
FR-
F15
FRONT DOOR
TWEETER
SPEAKER LH
F16
FRONT DOOR
TWEETER
SPEAKER RH
F13
FRONT DOOR
SPEAKER LH
F14
FRONT DOOR
SPEAKER RH

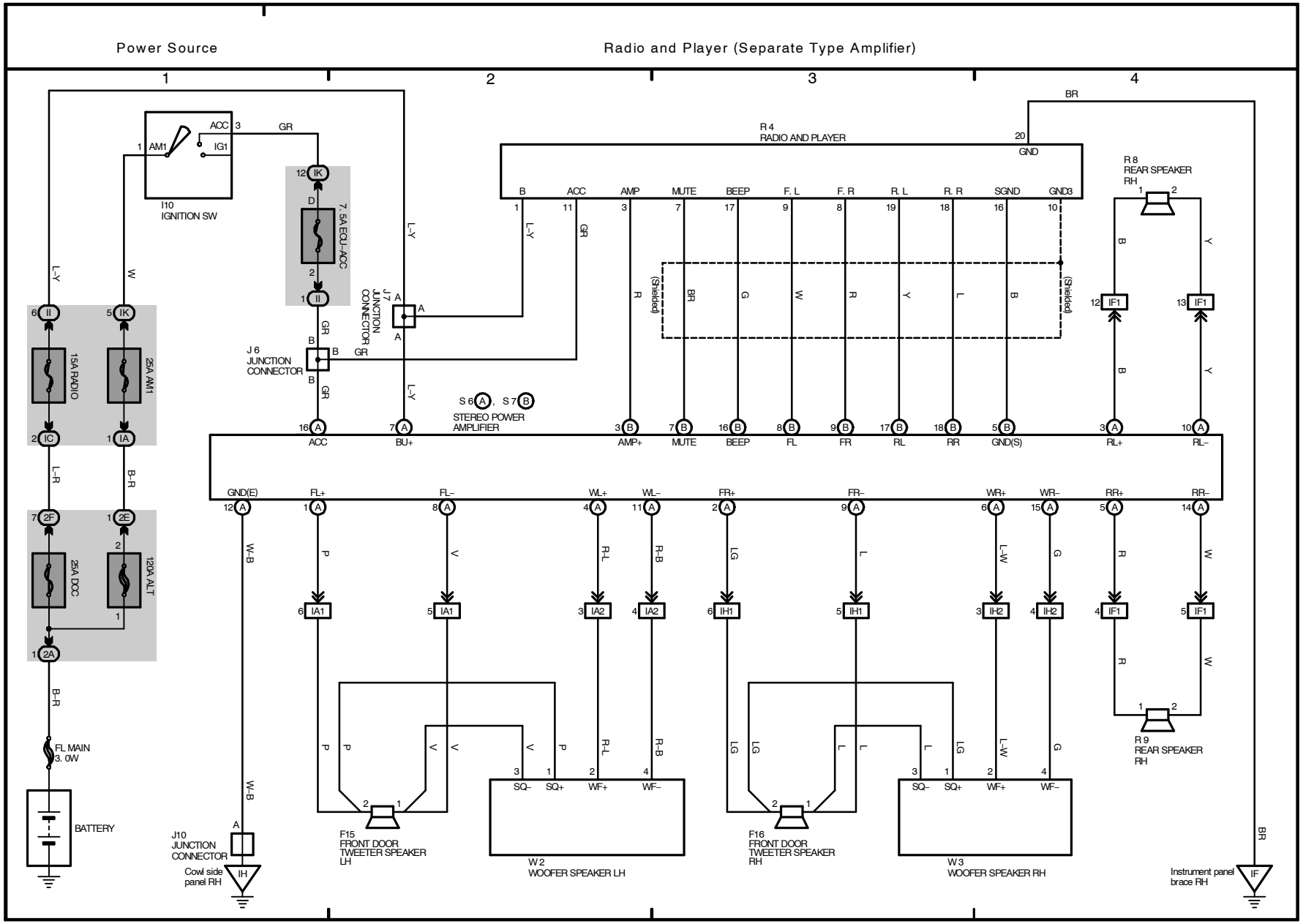
Power Source
Radio and Player (Separate Type Amplifier)
1
2
3
4
I10
IGNITION SW
ACC
IG1
AM1
7. 5A ECU-ACC
15A RADIO
25A AM1
25A DCC
120A ALT
FL MAIN
3. 0W
BATTERY
J6
JUNCTION
CONNECTOR
J7
JUNCTION
CONNECTOR
J10
JUNCTION
CONNECTOR
Cowl side
panel RH
R 4
RADIO AND PLAYER
GND
B
ACC
AMP
MUTE
BEEP
F. L
F. R
R. L
R. R
SGND
GND3
(Shielded)
S 6, S 7
STEREO POWER
AMPLIFIER
ACC
BU+
AMP+
MUTE
BEEP
FL
FR
RL
RR
GND(S)
RL+
RL–
R 8
REAR SPEAKER
RH
R 9
REAR SPEAKER
RH
GND(E)
FL+
FL–
WL+
WL–
FR+
FR–
WR+
WR–
RR+
RR–
F15
FRONT DOOR
TWEETER SPEAKER
LH
F16
FRONT DOOR
TWEETER SPEAKER
RH
W 2
WOOFER SPEAKER LH
W 3
WOOFER SPEAKER RH
SQ–
SQ+
WF+
WF–
Instrument panel
brace RH

18 CELICA

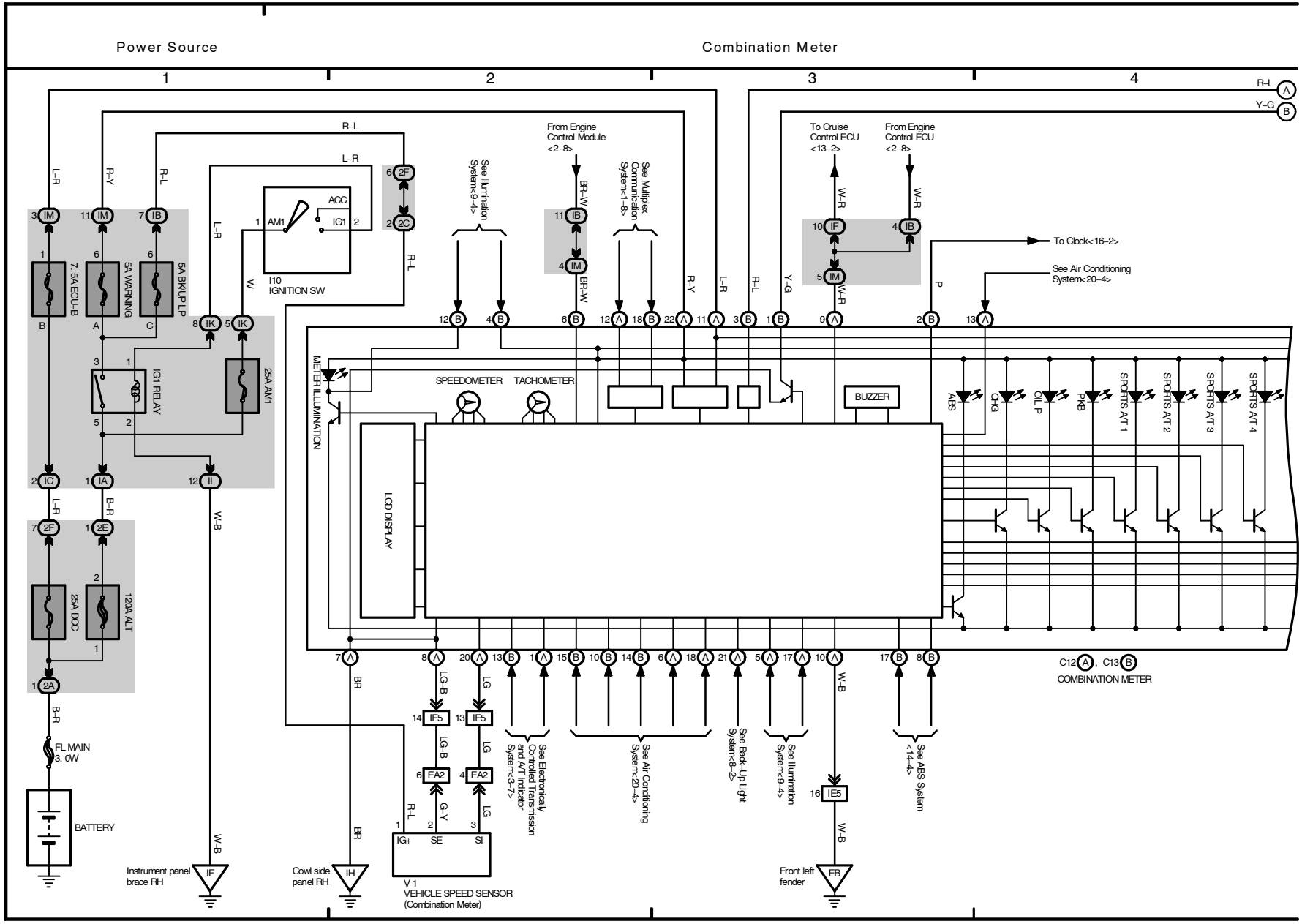
Power Source
Combination Meter
1
2
3
4
R–L
Y–G
From Engine Control Module <2–8>
To Cruise Control ECU <13–2>
From Engine Control ECU <2–8>
See Illumination System<9–4>
See Multiplex Communication System<1–8>
To Clock<16–2>
See Air Conditioning System<20–4>
ACC
IG1
AM1
I10 IGNITION SW
7. 5A ECU–B
5A WARNING
5A BK'UP L P
IG1 RELAY
25A AM1
25A DCC
120A ALT
FL MAIN 3. 0W
BATTERY
METER ILLUMINATION
SPEEDOMETER
TACHOMETER
LCD DISPLAY
BUZZER
ABS
CHG
OIL P
PKB
SPORTS A/T 1
SPORTS A/T 2
SPORTS A/T 3
SPORTS A/T 4
C12 A, C13 B
COMBINATION METER
See Electronically Controlled Transmission and A/T Indicator System<3–7>
See Air Conditioning System<20–4>
See Back–Up Light System<8–2>
See Illumination System<9–4>
See ABS System <14–4>
IG+
SE
SI
V 1
VEHICLE SPEED SENSOR (Combination Meter)
Instrument panel brace RH
Cowl side panel RH
Front left fender

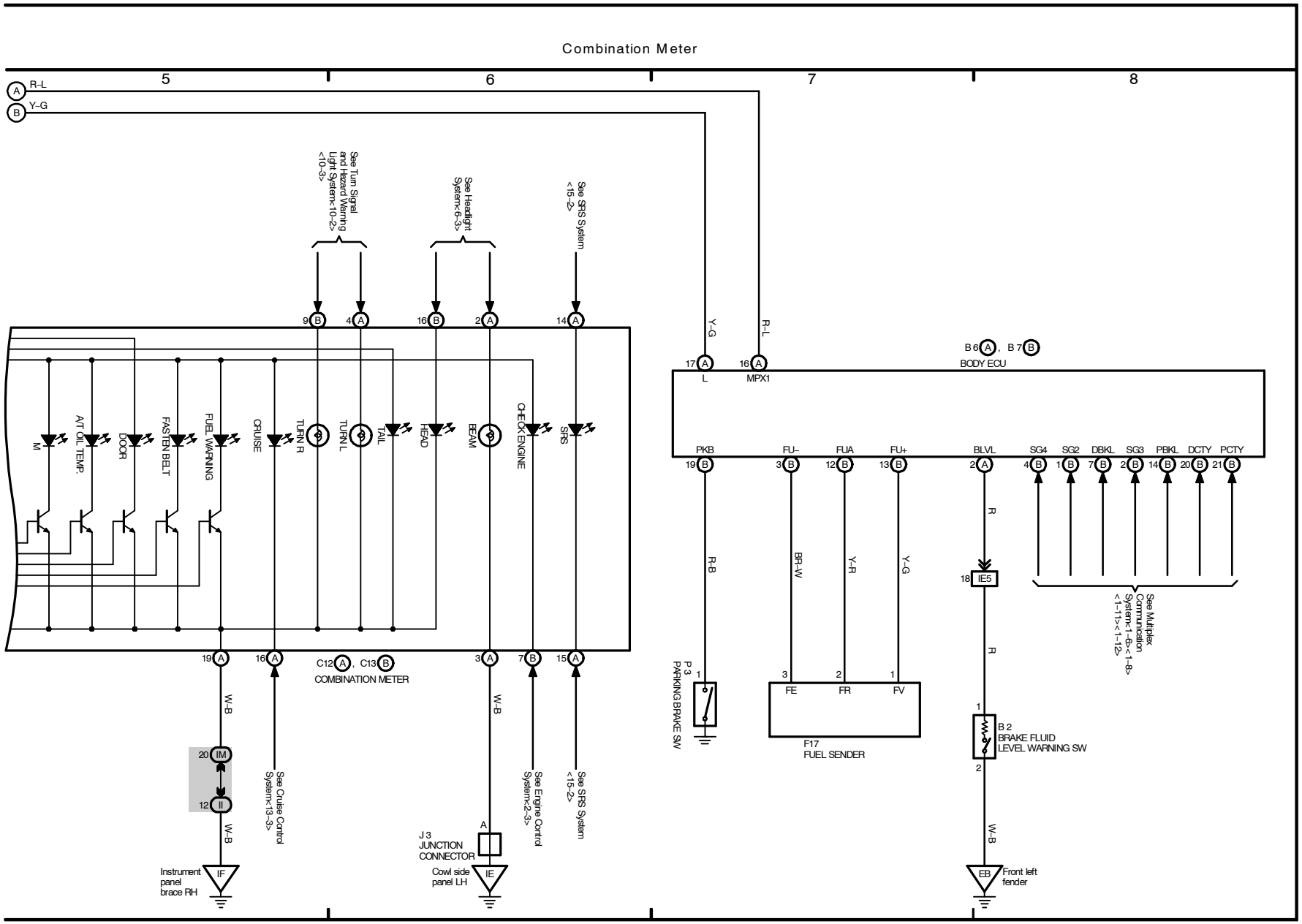
Combination Meter
5
6
7
8
A R-L
B Y-G
See Turn Signal and Hazard Warning Light System <10-3>
See Headlight System <6-3>
See SRS System <15-2>
9 B
4 A
16 B
2 A
14 A
Y-G
R-L
17 A L
16 A MPX1
B 6 A, B 7 B
BODY ECU
M
A/T OIL TEMP.
DOOR
FASTEN BELT
FUEL WARNING
CRUISE
TURN R
TURN L
TAIL
HEAD
BEAM
CHECK ENGINE
SRS
PKB
FU-
FUA
FU+
BLVL
SG4
SG2
DBKL
SG3
PBKL
DCTY
PCTY
19 B
3 B
12 B
13 B
2 A
4 B
1 B
7 B
2 B
14 B
20 B
21 B
R-B
BR-W
Y-R
Y-G
R
18 IE5
See Multiplex Communication System <1-6><1-8><1-11><1-12>
19 A
16 A
C12 A, C13 B
COMBINATION METER
3 A
7 B
15 A
W-B
W-B
P 3
PARKING BRAKE SW
1
3 FE
2 FR
1 FV
F17
FUEL SENDER
B 2
BRAKE FLUID LEVEL WARNING SW
20 IM
12 II
See Cruise Control System <13-3>
See Engine Control System <2-3>
See SRS System <15-2>
J 3
JUNCTION CONNECTOR
Instrument panel brace RH
IF
Cowl side panel LH
IE
EB
Front left fender

M OVERALL ELECTRICAL WIRING DIAGRAM

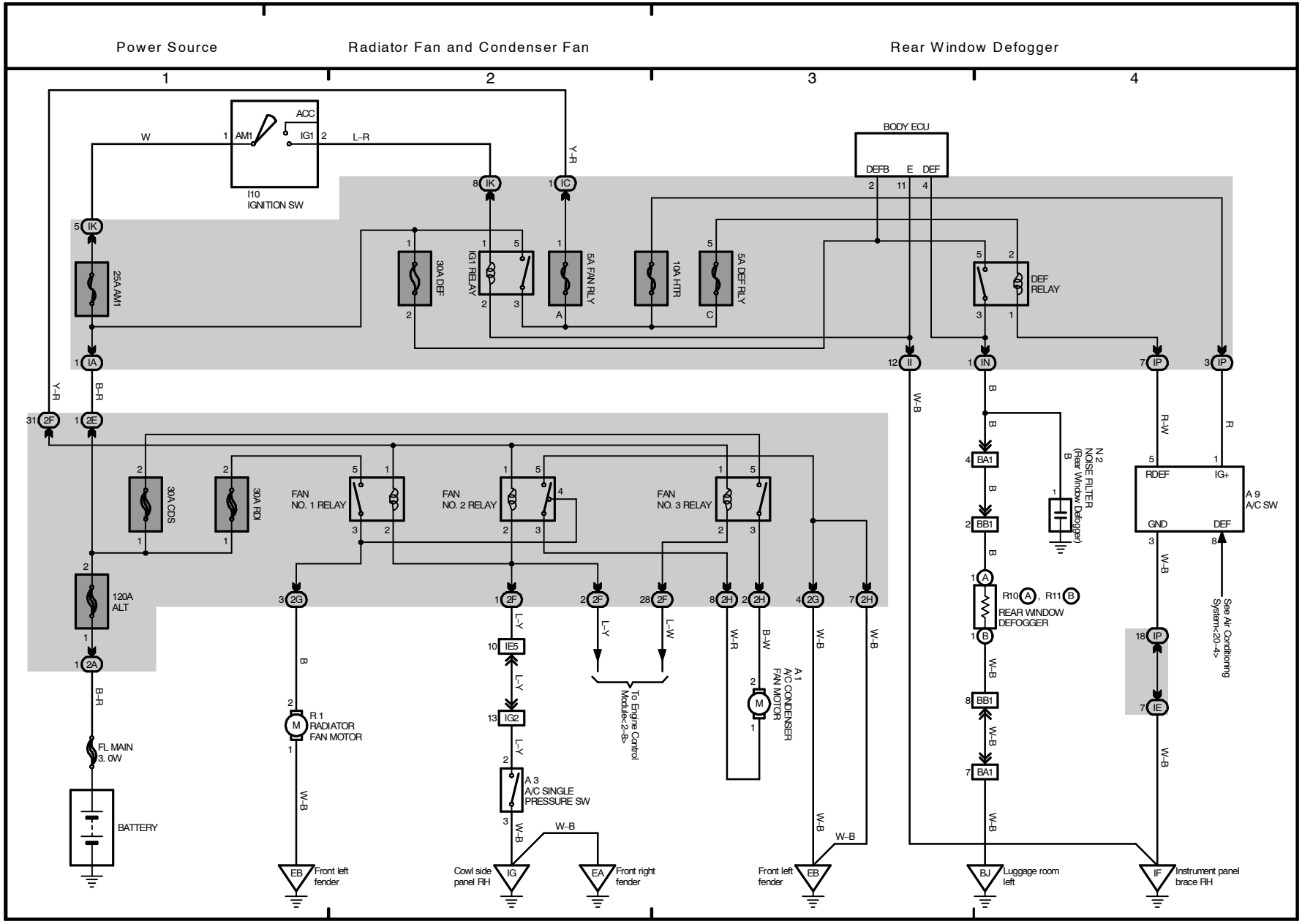

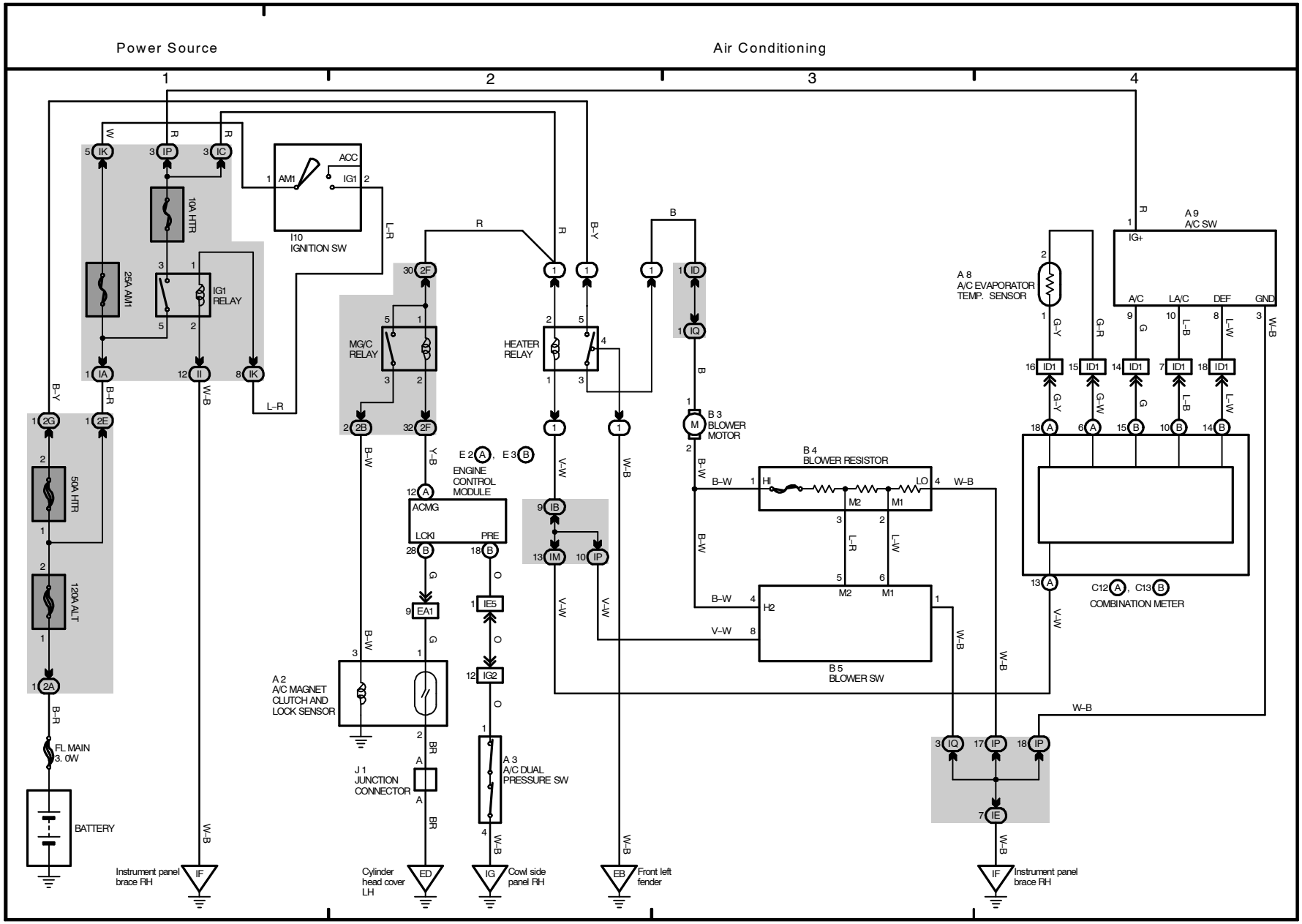
Power Source
Air Conditioning
1
2
3
4
10A HTR
25A AM1
IG1 RELAY
I10 IGNITION SW
ACC
IG1
AM1
MG/C RELAY
HEATER RELAY
B 3 BLOWER MOTOR
B 4 BLOWER RESISTOR
B 5 BLOWER SW
A 8 A/C EVAPORATOR TEMP. SENSOR
A 9 A/C SW
IG+
A/C
LA/C
DEF
GND
ENGINE CONTROL MODULE
ACMG
LCK1
PRE
E 2, E 3
C12, C13
COMBINATION METER
50A HTR
120A ALT
FL MAIN 3. 0W
BATTERY
A 2 A/C MAGNET CLUTCH AND LOCK SENSOR
J 1 JUNCTION CONNECTOR
A 3 A/C DUAL PRESSURE SW
Instrument panel brace RH
Cylinder head cover LH
Cowl side panel RH
Front left fender
Instrument panel brace RH